KOM1 500x250

Backdraught gravity dampe for shutting off air flow in rectangular air ducts

- Casing material: Galvanized steel

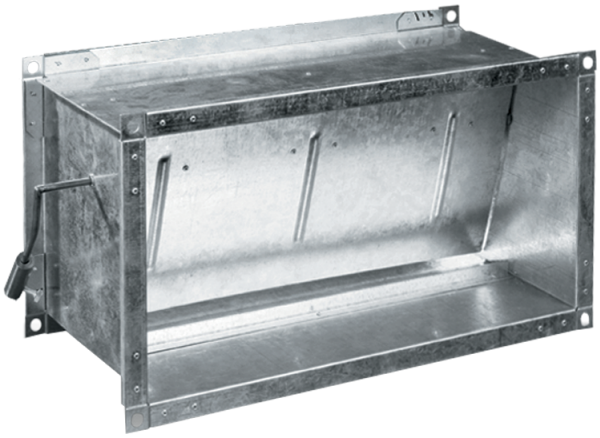

	Unit of measurement	KOM1 500x250
Weight	kg	3.73

Dimensions

B	B1	B2	B3	H	H1	H2	L
500	520	540	561	200	270	290	202

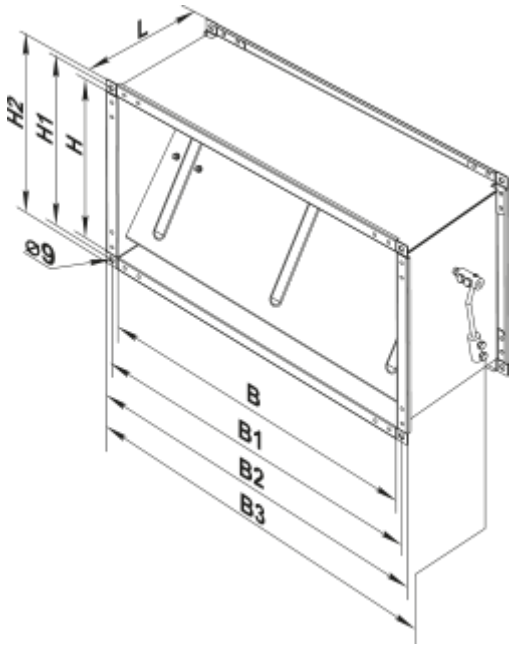
L
H2
H1
H
⌀9
B
B1
B2
B3