KR 500

Air dampers for controlling air flow in round air ducts

• Casing material: Galvanized steel



	Unit of measurement	KR 500
Connected air duct size	mm	500
Weight	kg	5.72

Dimensions

D	B	L
499	570	240

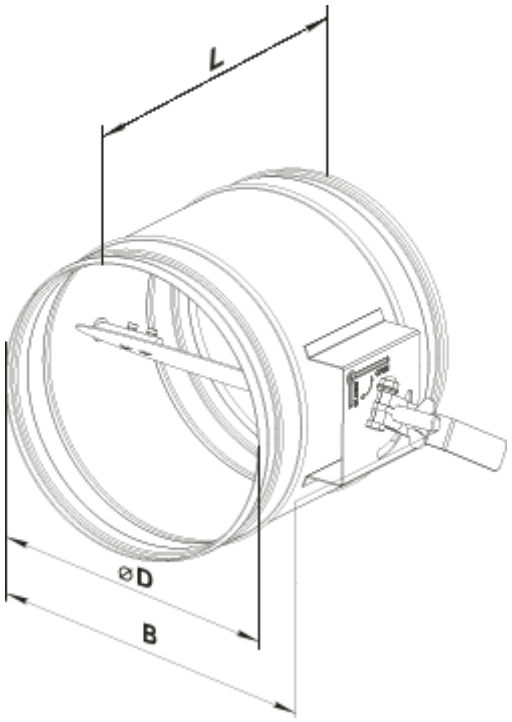
L
⌀D
B