KR 550

Air dampers for controlling air flow in round air ducts

• Casing material: Galvanized steel



	Unit of measurement	KR 550
Connected air duct size	mm	550
Weight	kg	6.47

Dimensions

D	B	L
549	620	240

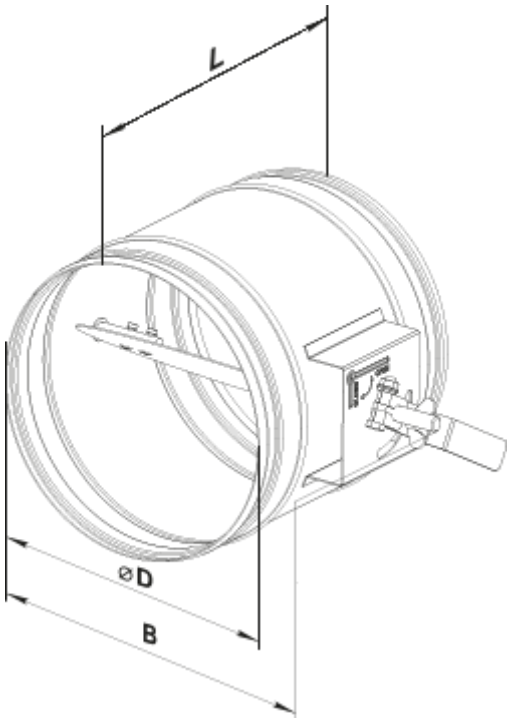
L
⌀D
B