KR 80

Air dampers for controlling air flow in round air ducts

• Casing material: Galvanized steel



	Unit of measurement	KR 80
Connected air duct size	mm	80
Weight	kg	0.57

Dimensions

D	B	L
79	140	200

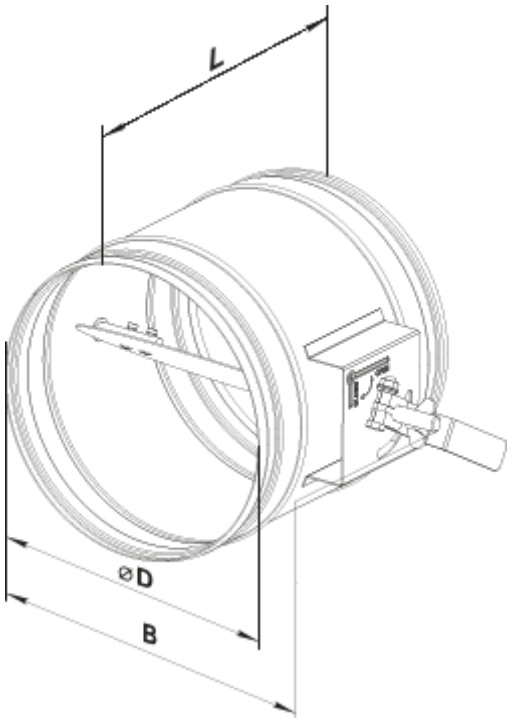
L
⌀D
B