KRV 450

Air dampers for automatic air flow control in round ducts

- Casing material: Galvanized steel



	Unit of measurement	KRV 450
Connected air duct size	mm	450
Weight	kg	3.78

Dimensions

D	B	L	H
449	570	240	–

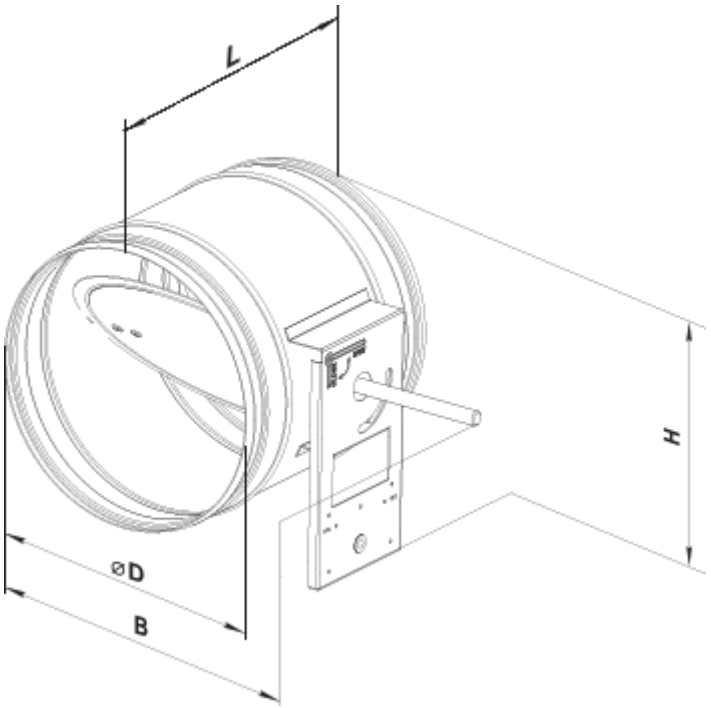
L
H
ØD
B