# KRV 500

Air dampers for automatic air flow control in round ducts

• Casing material: Galvanized steel



| | Unit of measurement | KRV 500 |
|---|---|---|
| Connected air duct size | mm | 500 |
| Weight | kg | 5.55 |

## Dimensions

| D | B | L | H |
|---|---|---|---|
| 499 | 620 | 240 | – |

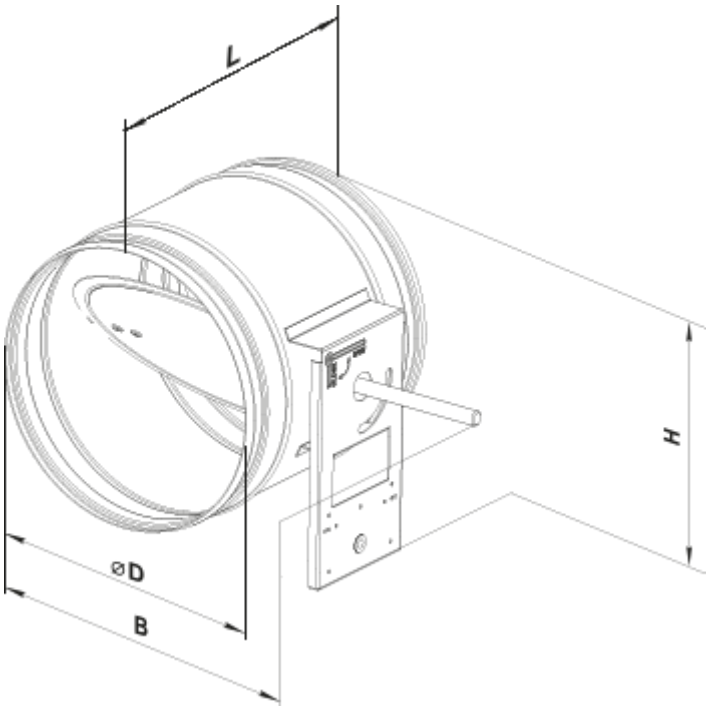
L
H
ØD
B