KSK 160 4E



Kitchen inline fans in sound-insulated casing with operational temperature of 120 °C

- Sound pressure level LpA at 3 m: 41
- Sound-insulated casing
- Impeller type: Centrifugal impeller with forward curved blades
- Casing material: Galvanized steel

	Unit of measurement	KSK 160 4E
Connected air duct size	mm	160
Phases	-	1
Minimum supply voltage	V	230
Maximum supply voltage	V	230
Power supply frequency	Hz	50
Rated power	W	180
Unit current	A	1.7
Maximum airflow	m^3/h	700
Rotation speed at 50hz	-	1450
Sound pressure level LpA at 3 m	dB(A)	41
Weight	kg	17
Transported air temperature (max)	°C	120
Transported air temperature (min)	°C	-20
Maximum transported air temperature	-	120°C CONTINUOUS
Ingress protection rating	-	IP54
Impeller material	-	Galvanized steel
Size	mm	160

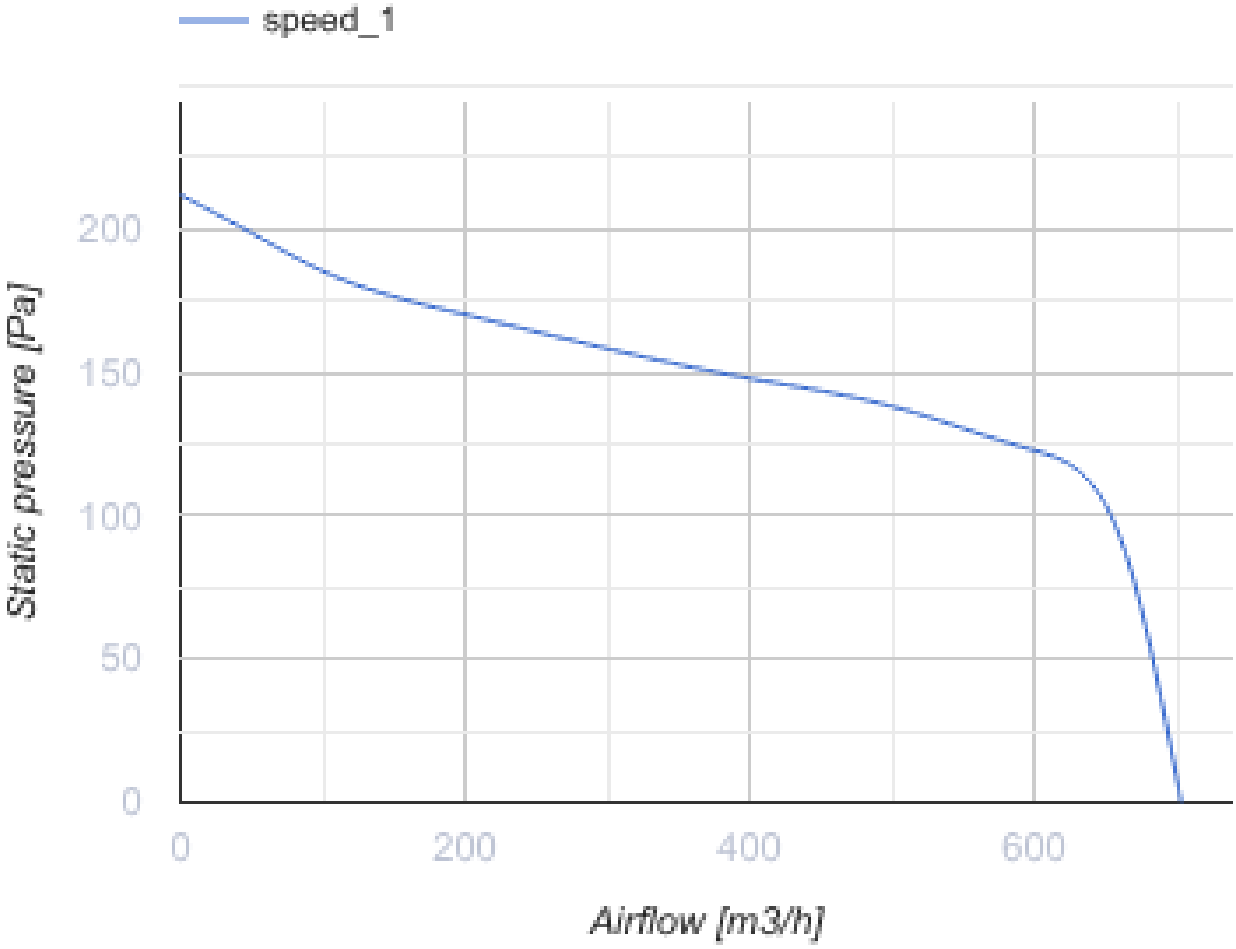
speed_1
Static pressure [Pa]
200
150
100
50
0
0
200
400
600
Airflow [m3/h]

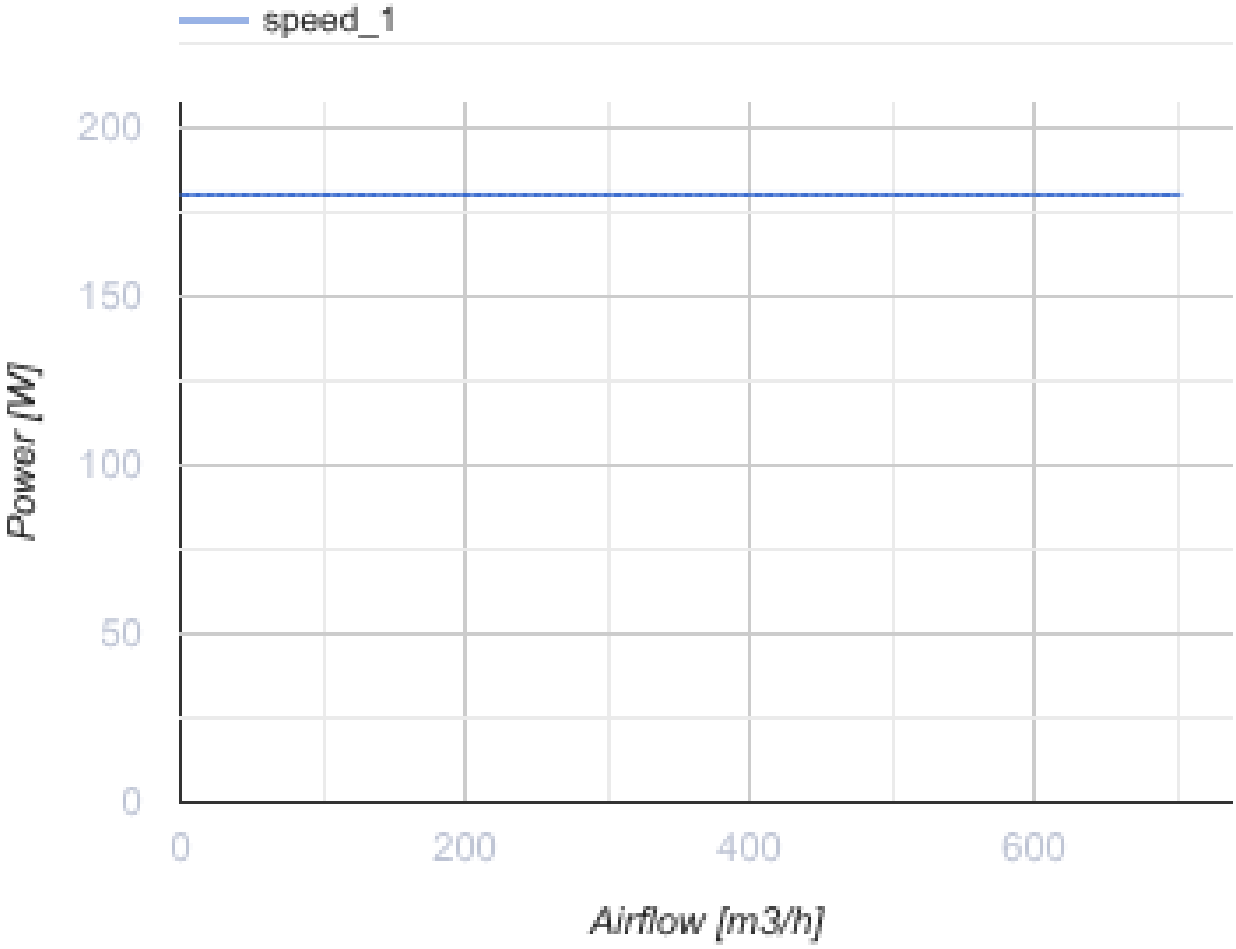

Dimensions

ØD	B	B1	H	H1	L	L1	L2	L3	L4
160	410	330	540	365	525	500	470	475	205

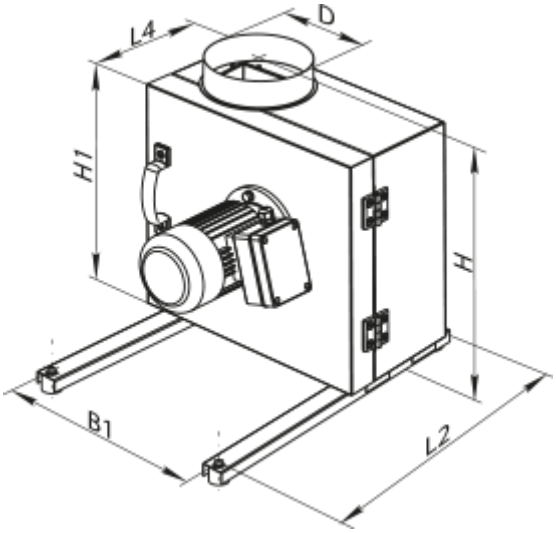

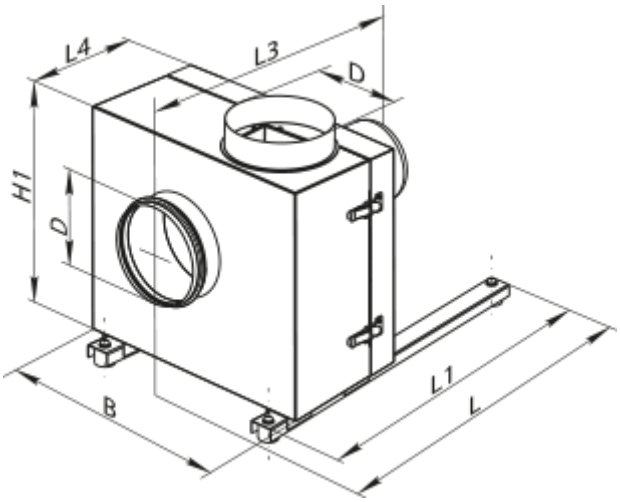

Accessories

For round ducts

Name	Photo	Description
KOM 160		Backdraught damper with spring-loaded plates for shutting off air flow in round air ducts

For round ducts

Name	Photo	Description
VVG 160	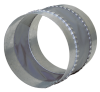	Flexible anti-vibration inserts for round ducts