# KSK 200 4D



Kitchen inline fans in sound-insulated casing with operational temperature of 120 °C

- Sound pressure level LpA at 3 m: 45
- Sound-insulated casing
- Impeller type: Centrifugal impeller with forward curved blades
- Casing material: Galvanized steel

| | Unit of measurement | KSK 200 4D |
|---|---|---|
| Connected air duct size | mm | 200 |
| Phases | - | 3 |
| Minimum supply voltage | V | 400 |
| Maximum supply voltage | V | 400 |
| Power supply frequency | Hz | 50 |
| Rated power | W | 750 |
| Unit current | A | 2 |
| Maximum airflow | $m^3/h$ | 1650 |
| Rotation speed at 50hz | - | 1465 |
| Sound pressure level LpA at 3 m | dB(A) | 45 |
| Weight | kg | 25 |
| Transported air temperature (max) | °C | 120 |
| Transported air temperature (min) | °C | -20 |
| Maximum transported air temperature | - | 120°C CONTINUOUS |
| Ingress protection rating | - | IP54 |
| Impeller material | - | Galvanized steel |
| Size | mm | 200 |

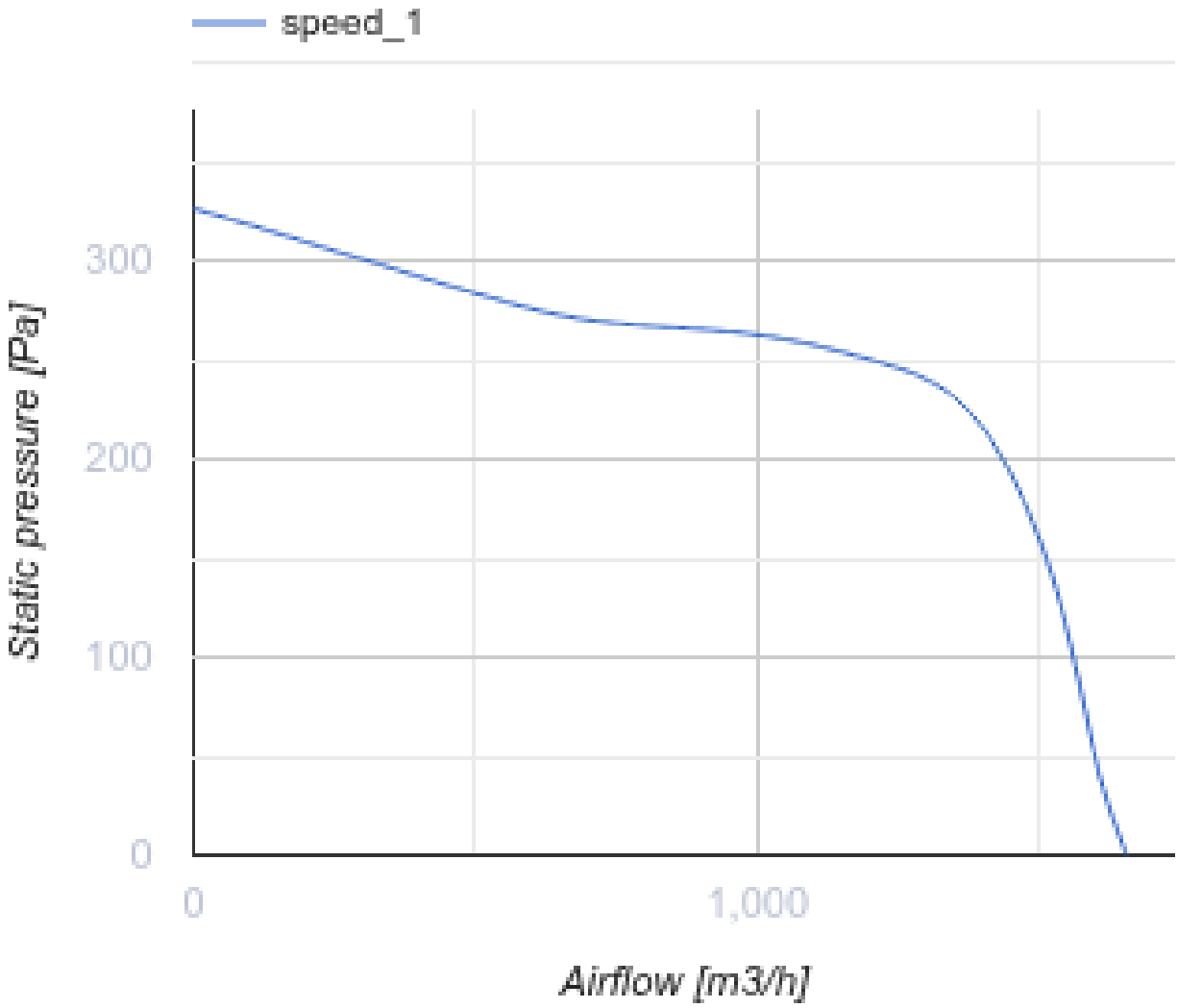
speed_1
300
200
100
0
Static pressure [Pa]
0
1,000
Airflow [m3/h]

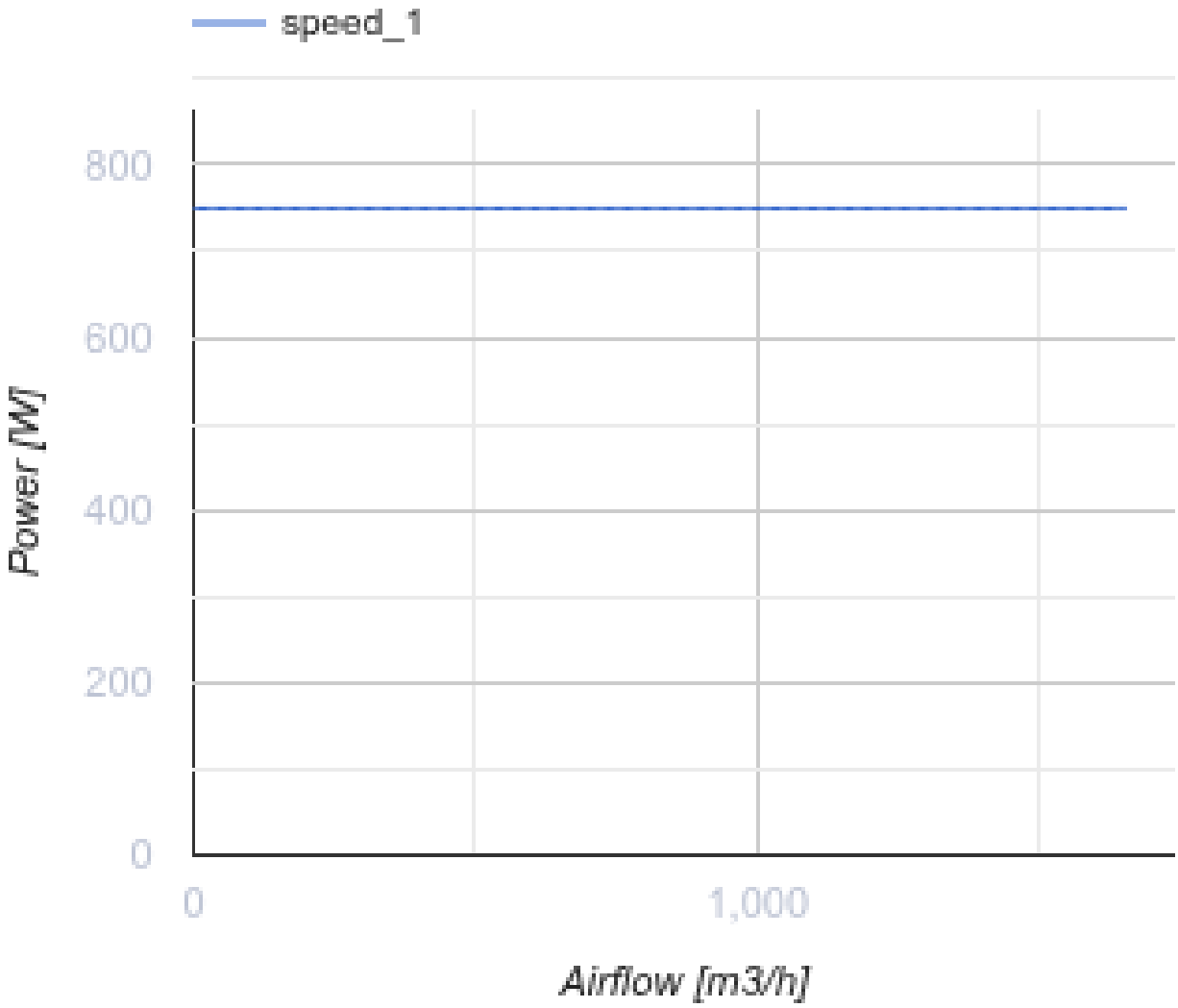


## Dimensions

| ØD | B | B1 | H | H1 | L | L1 | L2 | L3 | L4 |
|---|---|---|---|---|---|---|---|---|---|
| 200 | 485 | 365 | 600 | 425 | 625 | 600 | 570 | 515 | 235 |

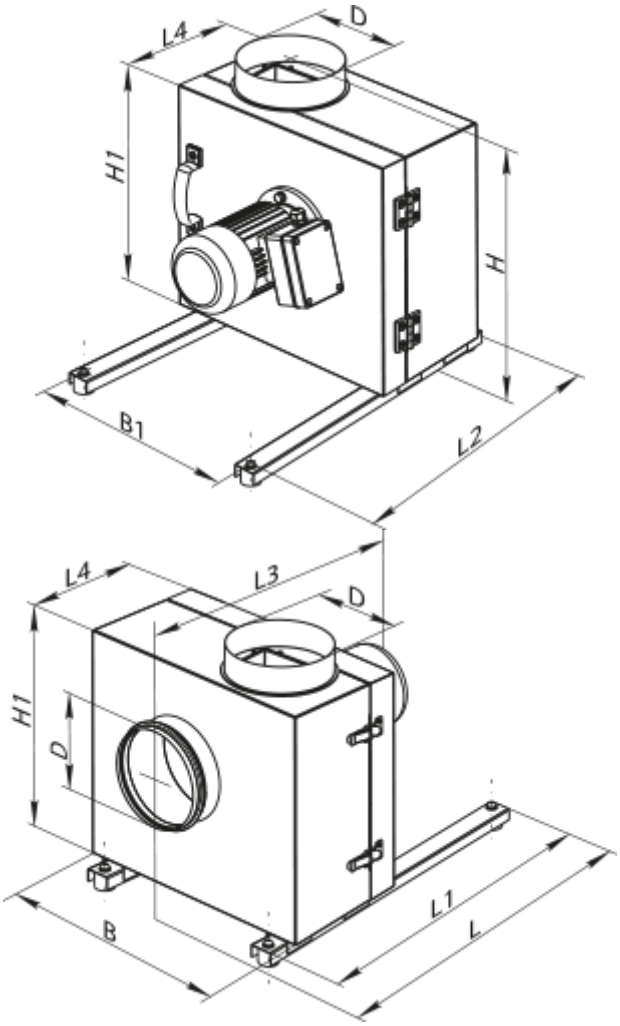


## Accessories

### For round ducts

| Name | Photo | Description |
|---|---|---|
| KOM 200 |  | Backdraught damper with spring-loaded plates for shutting off air flow in round air ducts |

### For round ducts

| Name | Photo | Description |
|---|---|---|
| VVG 200 | 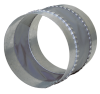 | Flexible anti-vibration inserts for round ducts |

### Transformer speed controllers

| Name | Photo | Description |
|---|---|---|

| | | |
|---|---|---|
| RSA5D-4,0-M |  | Three phase speed controller |