KSK 355 2D



Kitchen inline fans in sound-insulated casing with operational temperature of 120 °C

- Sound pressure level LpA at 3 m: 54
- Sound-insulated casing
- Impeller type: Centrifugal impeller with backward curved blades
- Casing material: Galvanized steel

	Unit of measurement	KSK 355 2D
Connected air duct size	mm	355
Phases	-	3
Minimum supply voltage	V	400
Maximum supply voltage	V	400
Power supply frequency	Hz	50
Rated power	W	3145
Unit current	A	6.12
Maximum airflow	m^3/h	6185
Rotation speed at 50hz	-	2652
Sound pressure level LpA at 3 m	dB(A)	54
Weight	kg	65
Transported air temperature (max)	°C	110
Transported air temperature (min)	°C	-20
Maximum transported air temperature	-	120°C CONTINUOUS
Ingress protection rating	-	IP54
Impeller material	-	Galvanized steel
Size	mm	355

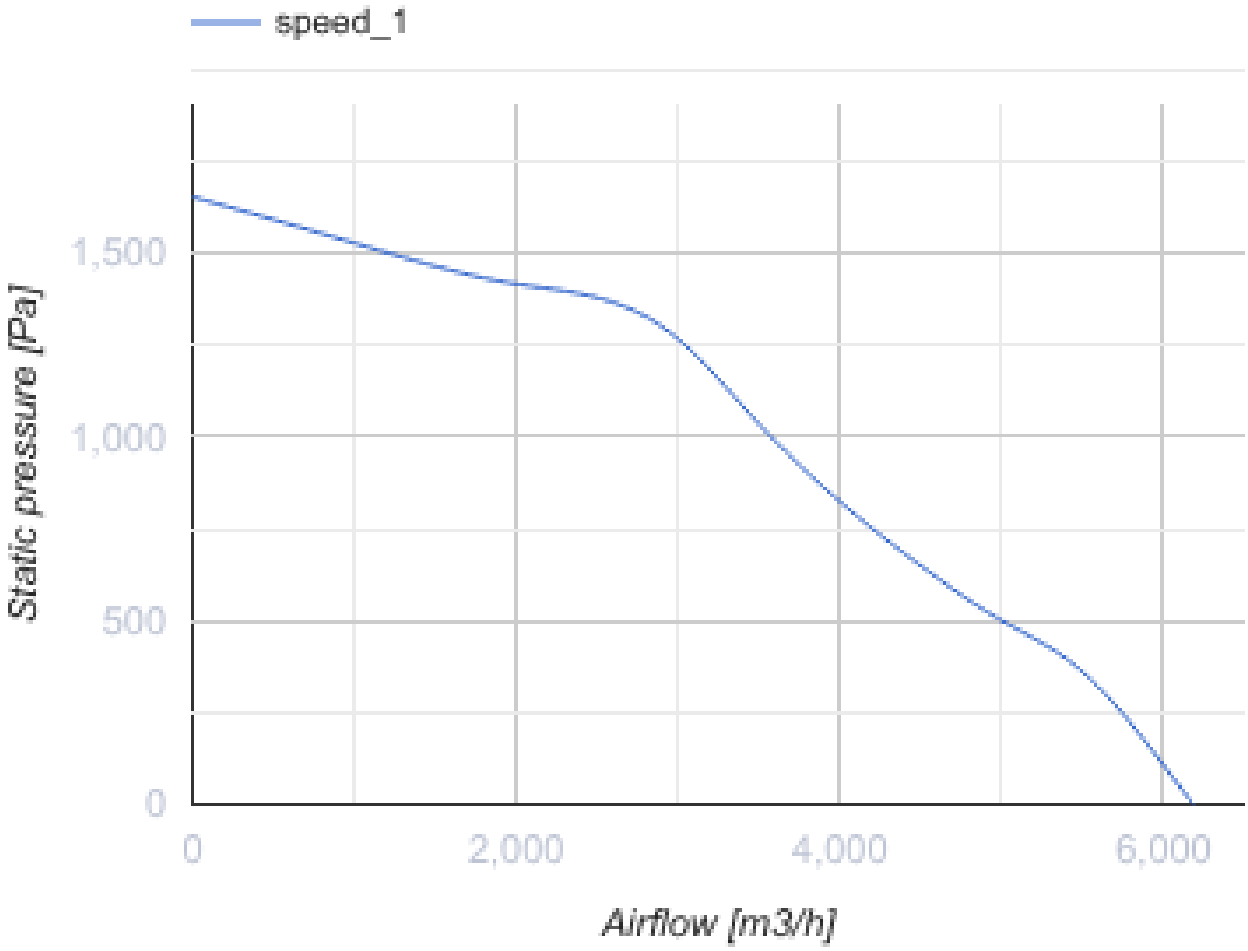
speed_1
Static pressure [Pa]
1,500
1,000
500
0
0
2,000
4,000
6,000
Airflow [m3/h]

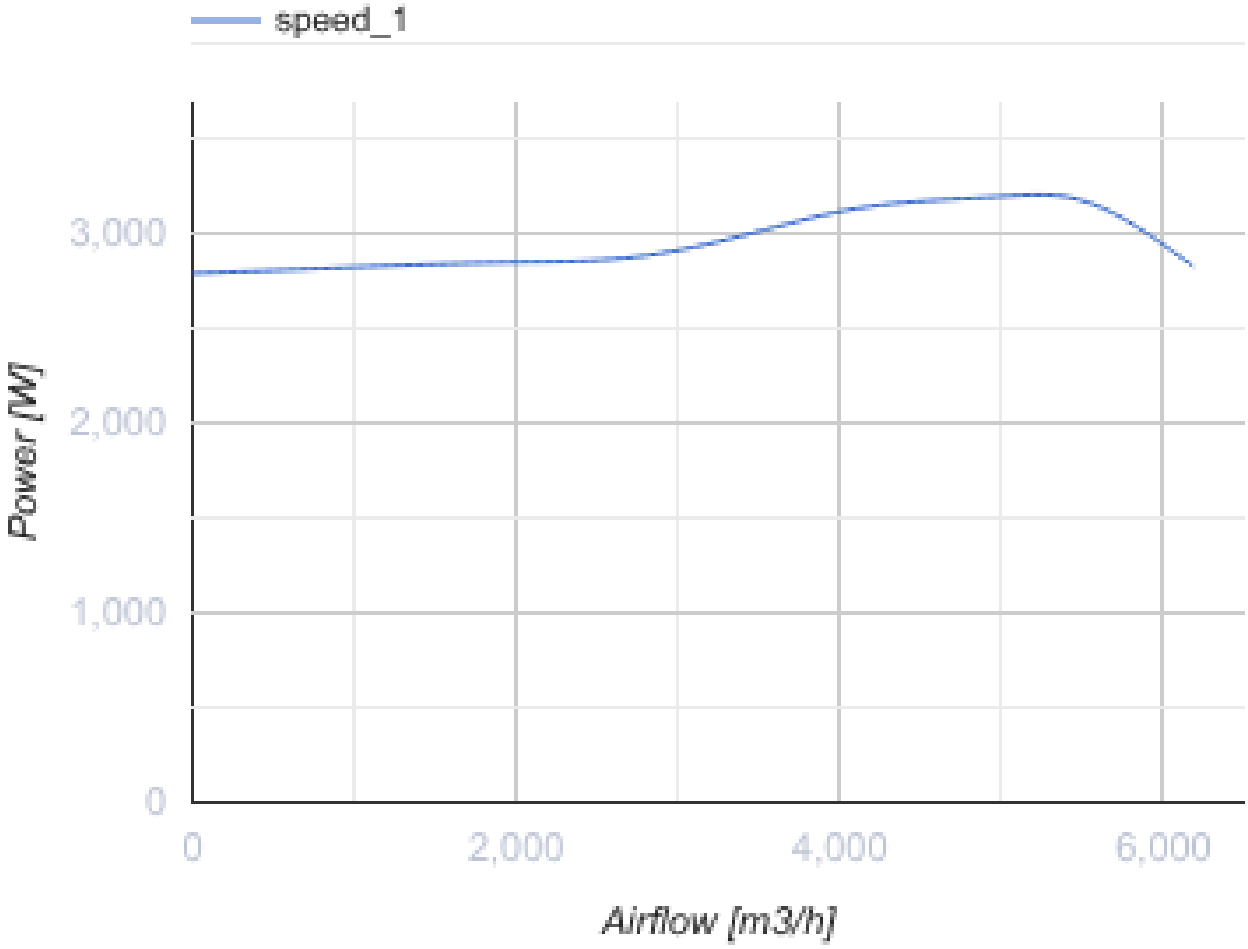

Dimensions

ØD	B	B1	H	H1	L	L1	L2	L3	L4
355	740	600	764	655	727	700	650	737	352

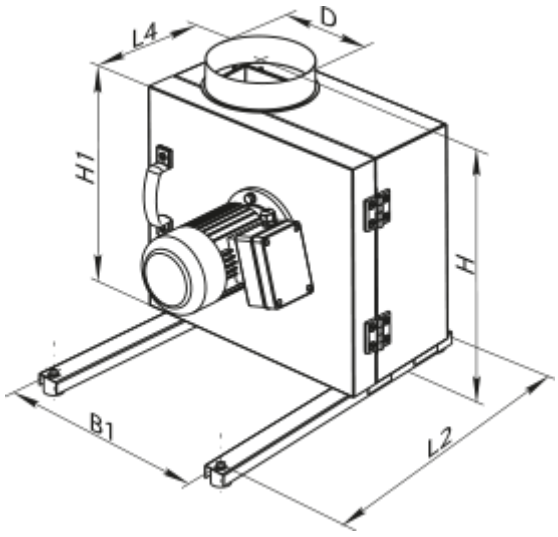

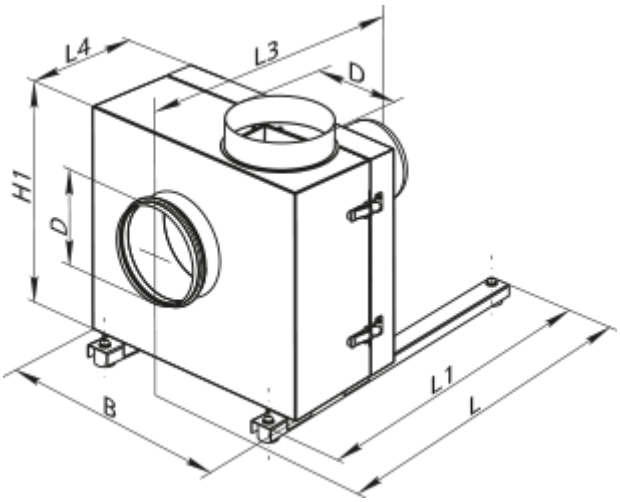

Accessories

For round ducts

Name	Photo	Description
VVG 355	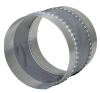	Flexible anti-vibration inserts for round ducts

Transformer speed controllers

Name	Photo	Description
RSA5D-8,0-M		Three phase speed controller