KSK 355 2E



Kitchen inline fans in sound-insulated casing with operational temperature of 120 °C

- Sound pressure level LpA at 3 m: 54
- Sound-insulated casing
- Impeller type: Centrifugal impeller with backward curved blades
- Casing material: Galvanized steel

	Unit of measurement	KSK 355 2E
Connected air duct size	mm	355
Phases	-	1
Minimum supply voltage	V	230
Maximum supply voltage	V	230
Power supply frequency	Hz	50
Rated power	W	2621
Unit current	A	12.66
Maximum airflow	m^3/h	6570
Rotation speed at 50hz	-	2890
Sound pressure level LpA at 3 m	dB(A)	54
Weight	kg	68
Transported air temperature (max)	°C	110
Transported air temperature (min)	°C	-20
Maximum transported air temperature	-	120°C CONTINUOUS
Ingress protection rating	-	IP54
Impeller material	-	Galvanized steel
Size	mm	355

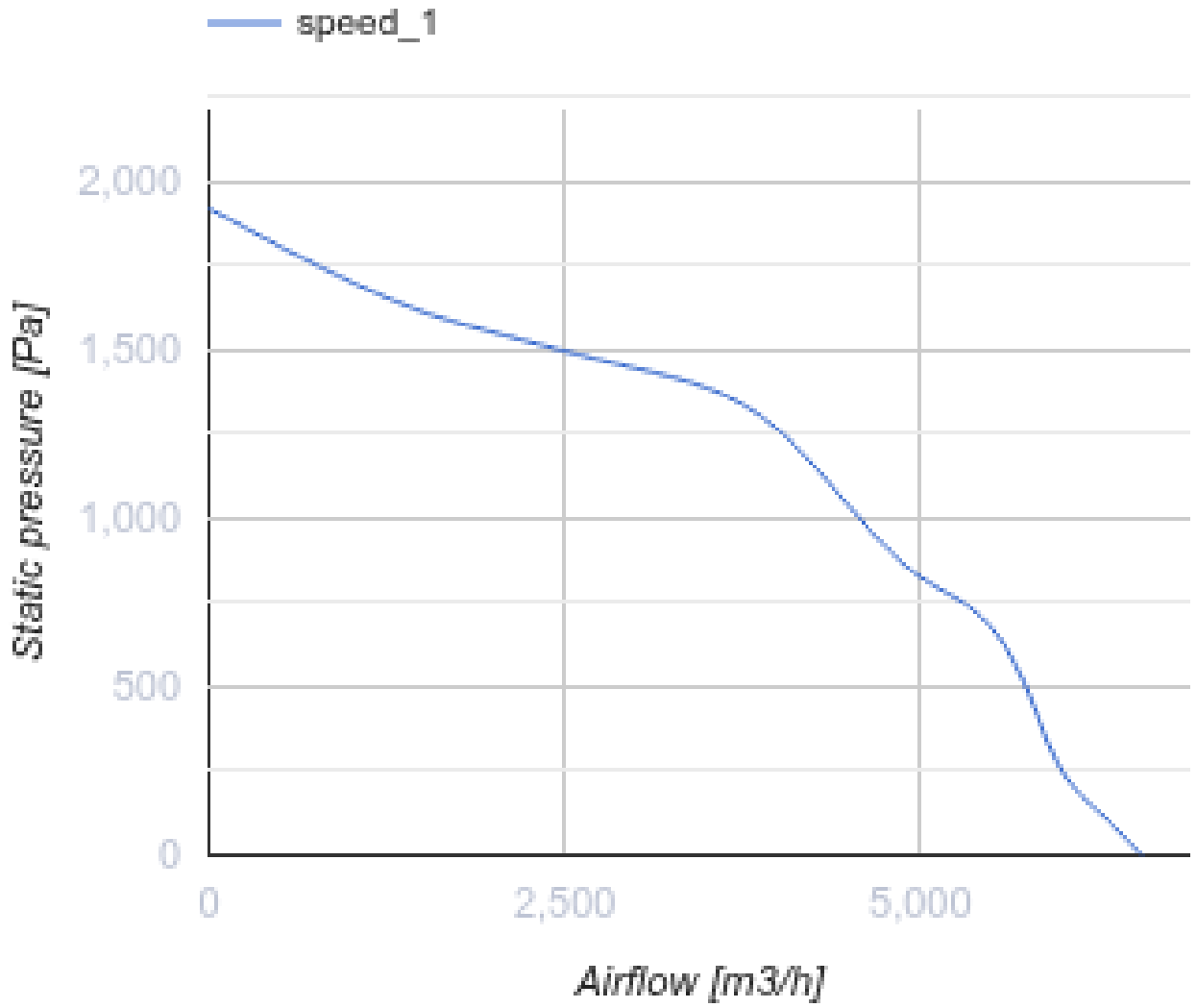
speed_1
2,000
1,500
1,000
500
0
Static pressure [Pa]
0
2,500
5,000
Airflow [m3/h]

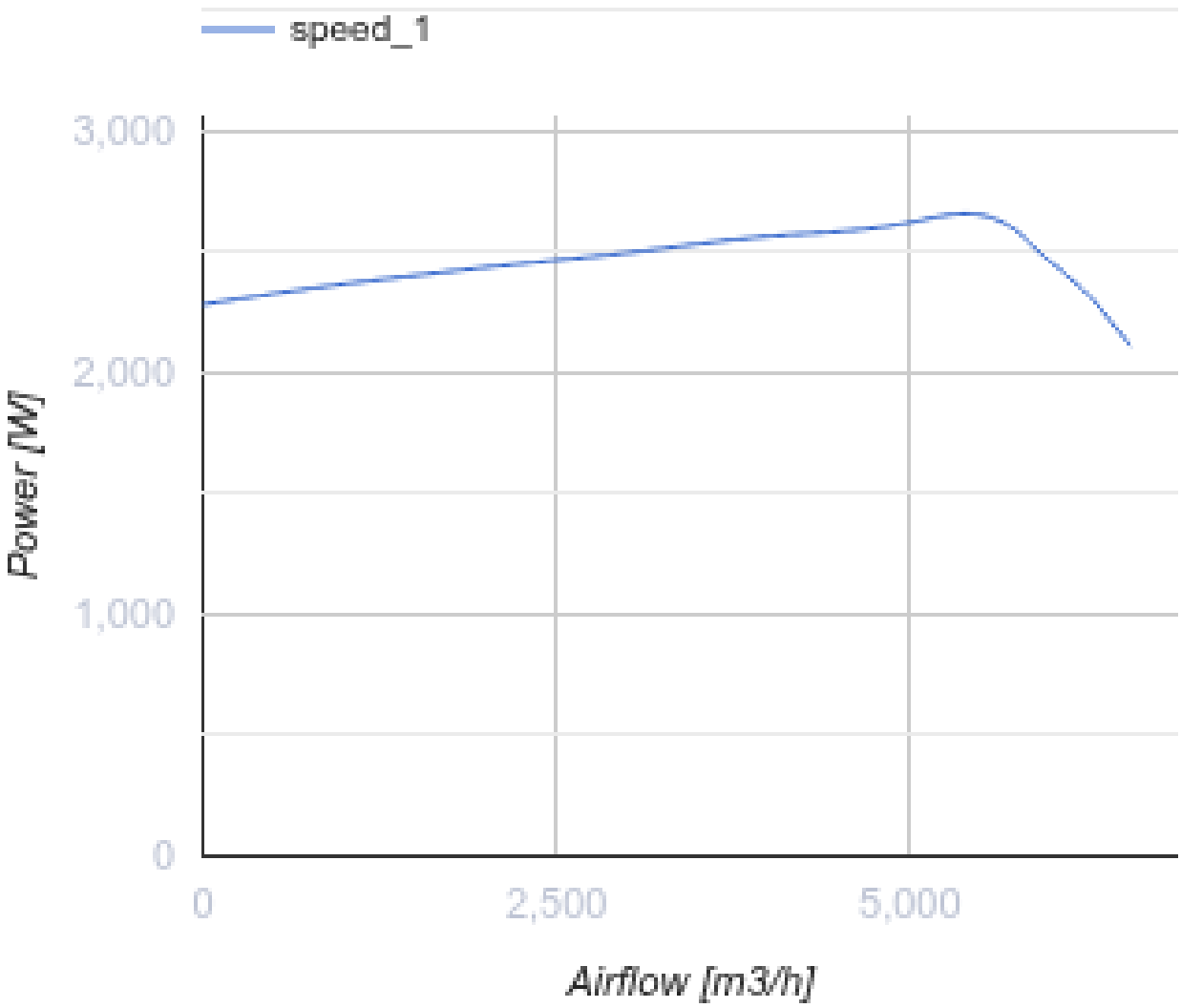

Dimensions

ØD	B	B1	H	H1	L	L1	L2	L3	L4
355	740	600	764	655	727	700	650	737	352

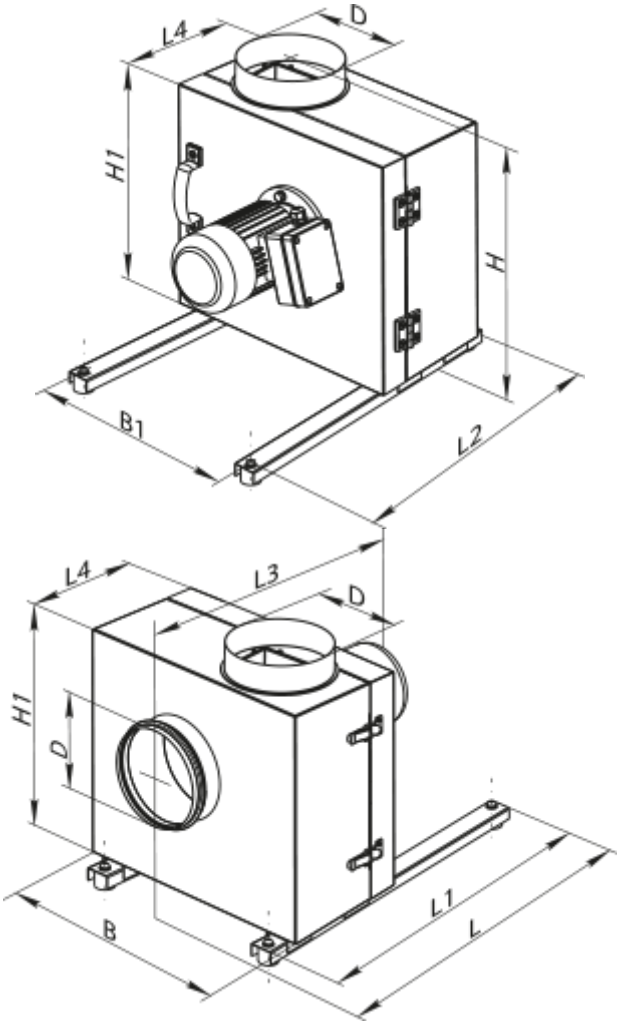

Accessories

For round ducts

Name	Photo	Description
VVG 355	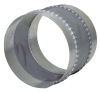	Flexible anti-vibration inserts for round ducts