KV 400x200

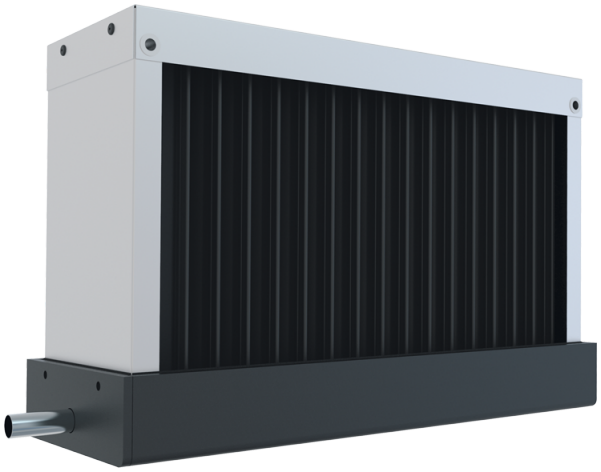

The droplet separators are designed to remove condensed droplets from the air in the ventilation air ducts

- Casing material: Galvanized steel

	Unit of measurement	KV 400x200
Weight	kg	4.5

Dimensions

A	B	C
503	293	163

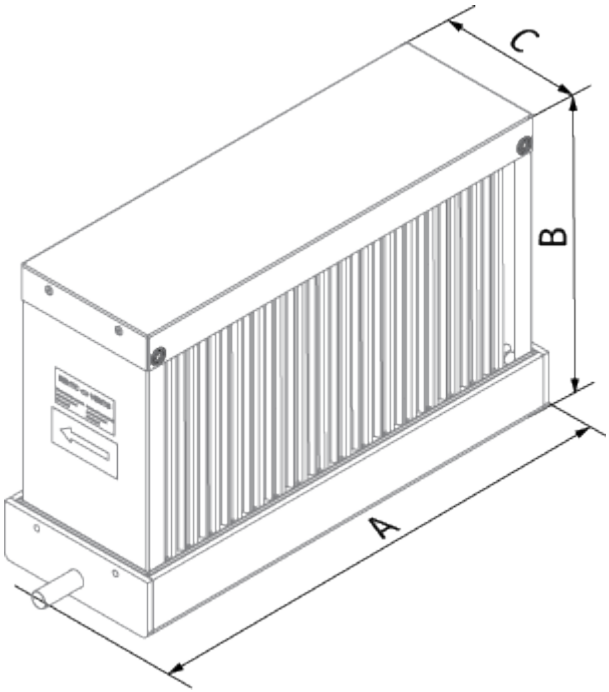
C
B
A