KV 600x350

The droplet separators are designed to remove condensed droplets from the air in the ventilation air ducts

- Casing material: Galvanized steel

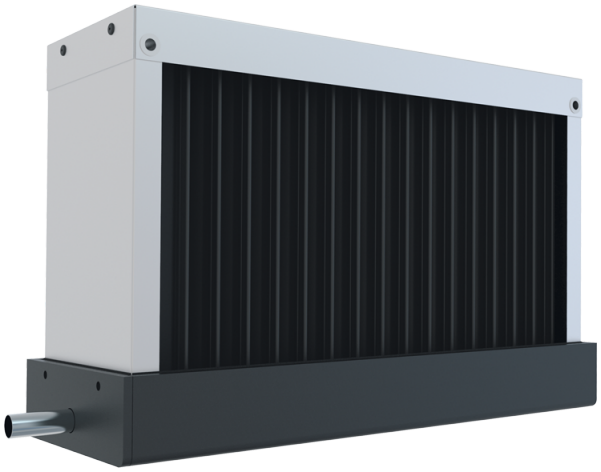

	Unit of measurement	KV 600x350
Weight	kg	7.7

Dimensions

A	B	C
703	443	163

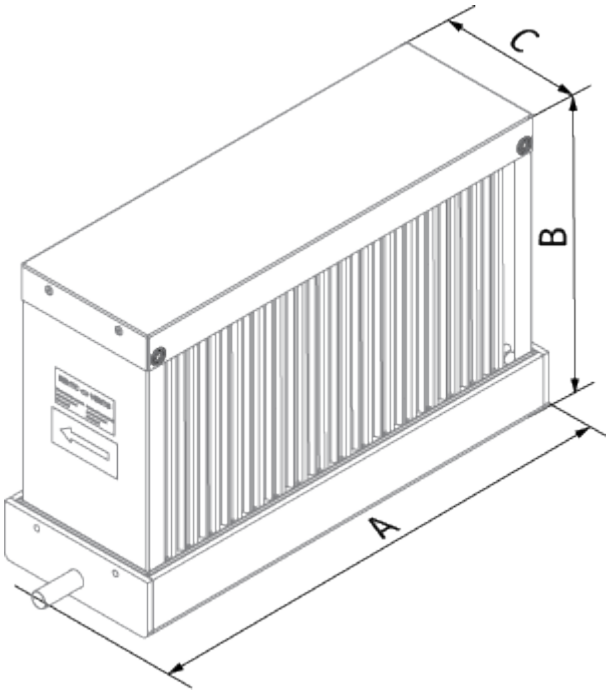
C
B
A