KVK 80



Centrifugal high-resistance fans in a plastic casing with a fire protection valve

- Casing material: Plastic

	Unit of measurement	KVK 80
Connected air duct size	mm	80

Dimensions

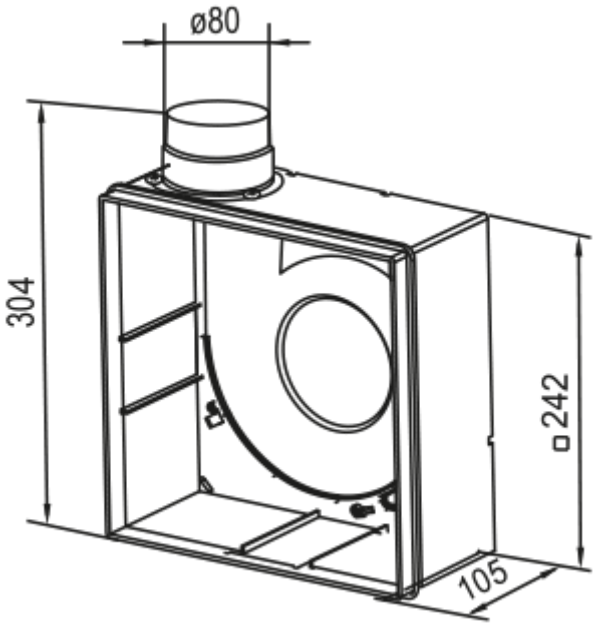

Accessories

Fittings

Name	Photo	Description
PVT 050/10		The adhesive PVC tape is an insulation tape made of plasticized PVC base covered with a glue layer
PVT 050/30		The adhesive PVC tape is an insulation tape made of plasticized PVC base covered with a glue layer
PVT 050/50		The adhesive PVC tape is an insulation tape made of plasticized PVC base covered with a glue layer

Flexible ducts

Name	Photo	Description
Polyvent N		Flexible uninsulated air duct made of metallized film

Window vents

Name	Photo	Description
PO 400		Window ventilators for supply ventilation