KZR-M-DN300

Protective grille casing

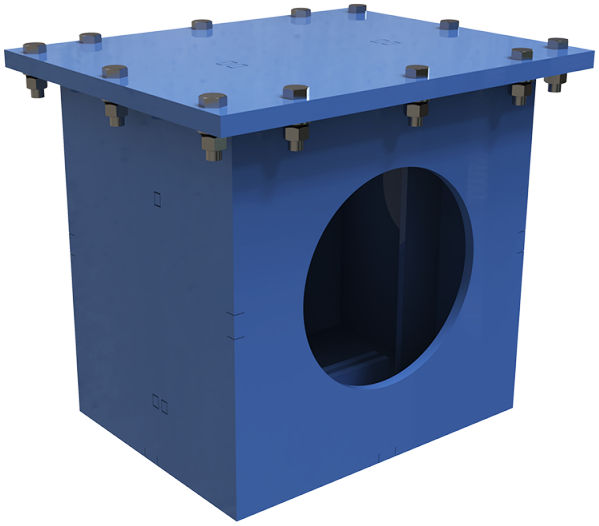

	Unit of measurement	KZR-M-DN300
Connected air duct size	mm	300
Weight	kg	135

Dimensions

ØD	H	H1	A
300	648	718	690

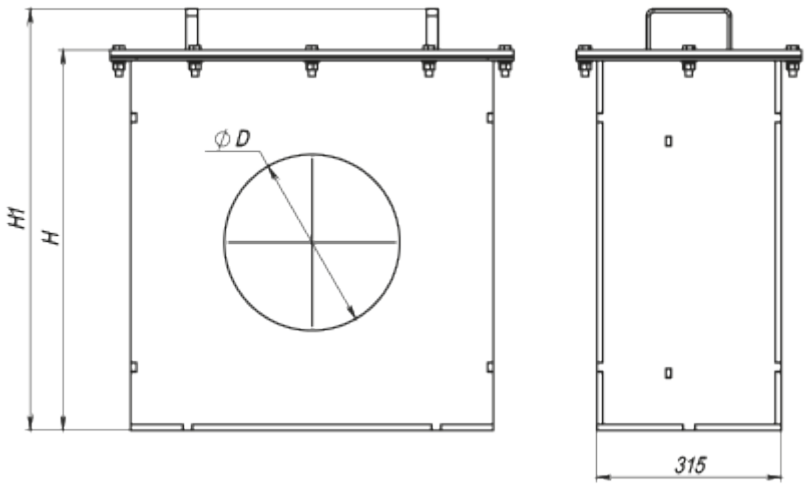

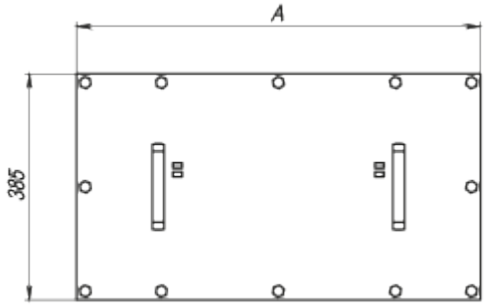
A
385

