KZR-M-DN315

Protective grille casing

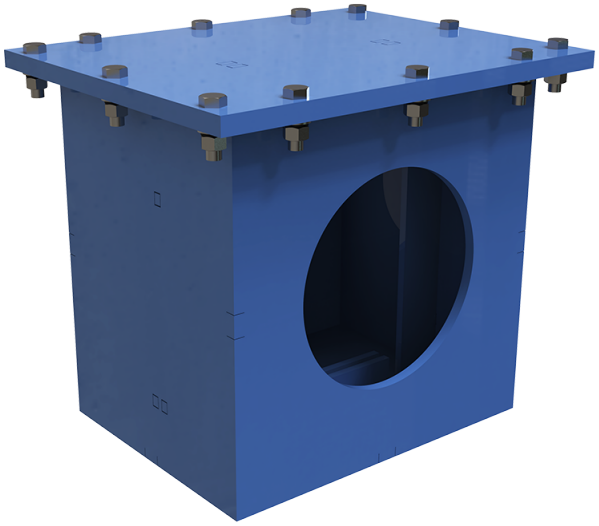

	Unit of measurement	KZR-M-DN315
Connected air duct size	mm	315
Weight	kg	133

Dimensions

ØD	H	H1	A
315	648	718	690

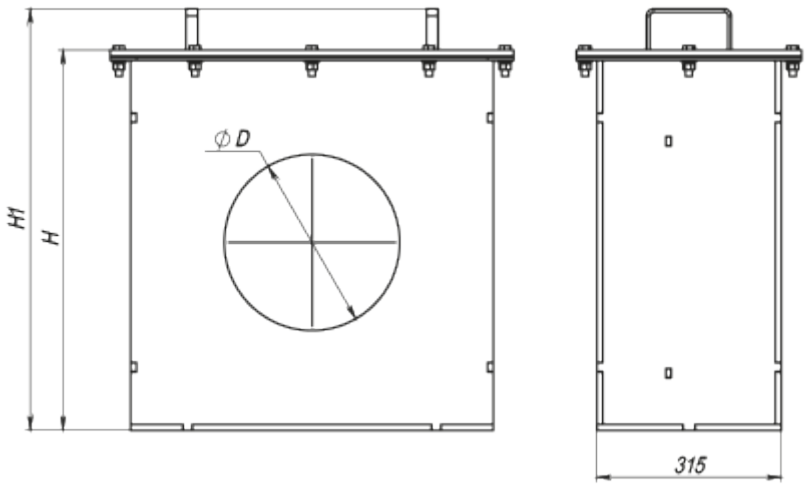

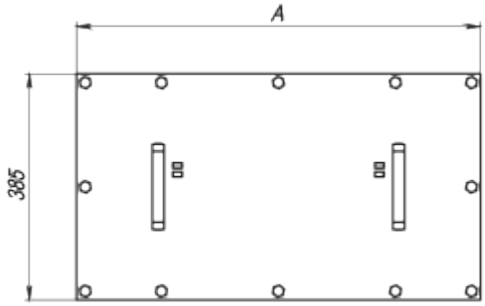
A
385

