# KZR-M-DN560

Protective grille casing

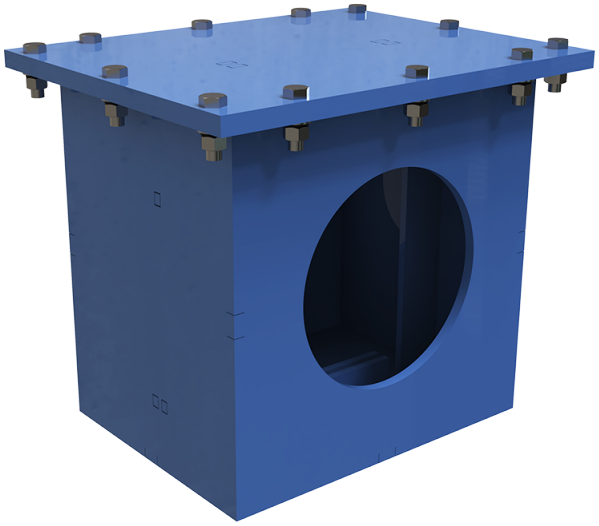

| | Unit of measurement | KZR-M-DN560 |
|---|---|---|
| Connected air duct size | mm | 560 |
| Weight | kg | 107 |

## Dimensions

| ØD | H | H1 | A |
|---|---|---|---|
| 560 | 648 | 718 | 690 |

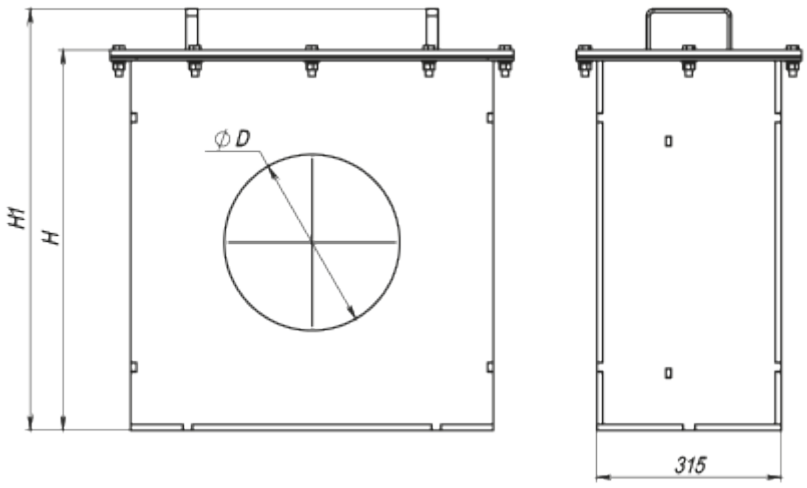

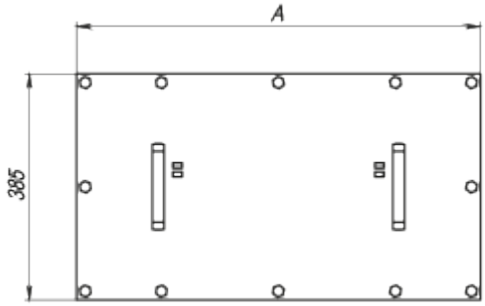
A
385

