KZR-S-DN125

Protective grille casing

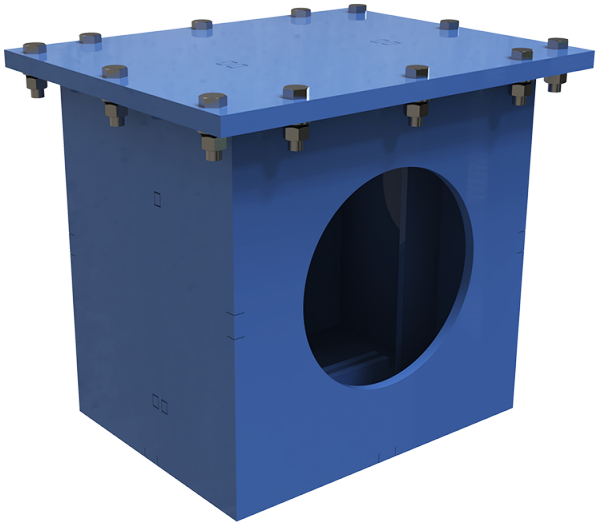

	Unit of measurement	KZR-S-DN125
Connected air duct size	mm	125
Weight	kg	52

Dimensions

ØD
125

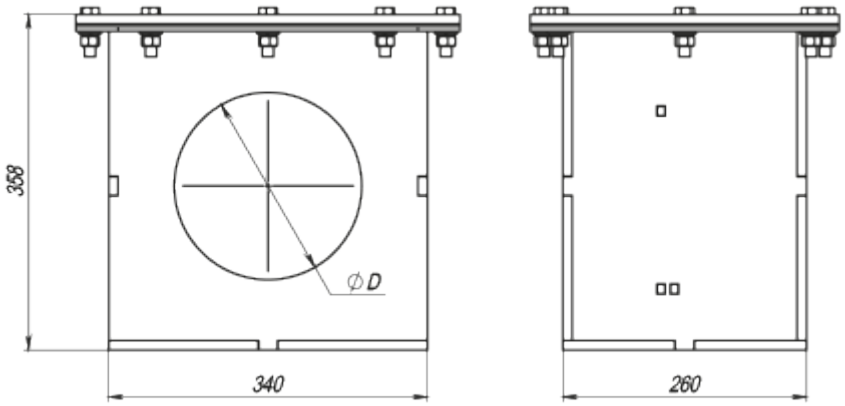

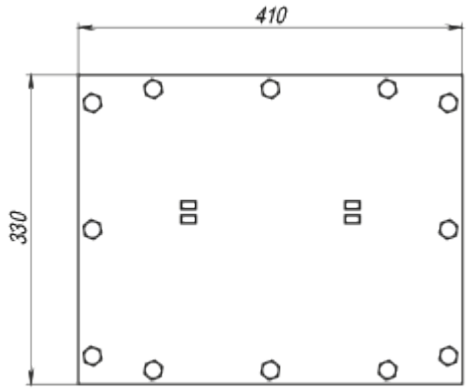
410
330

