KZR-S-DN180

Protective grille casing

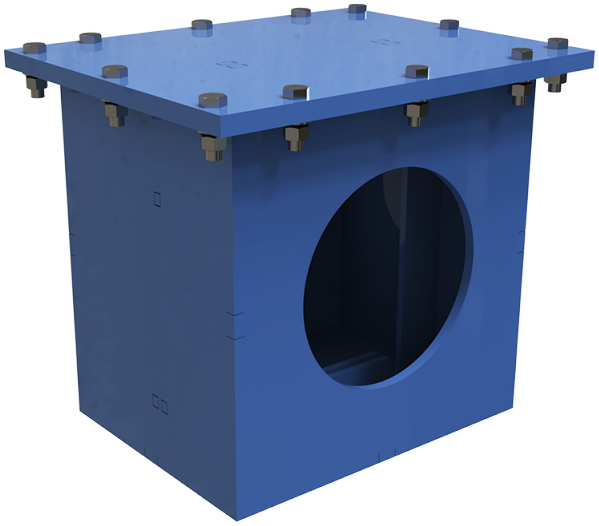

	Unit of measurement	KZR-S-DN180
Connected air duct size	mm	180
Weight	kg	50

Dimensions

ØD
180

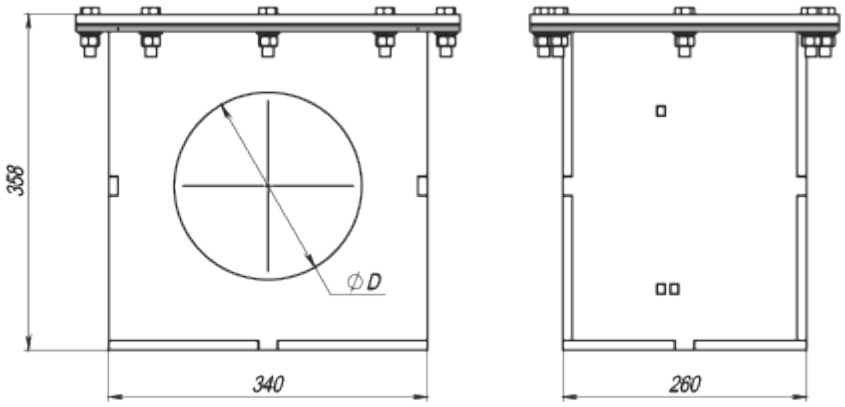

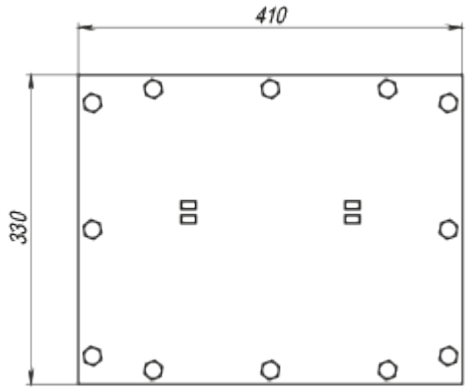
410
330

