KZR-S-DN225

Protective grille casing

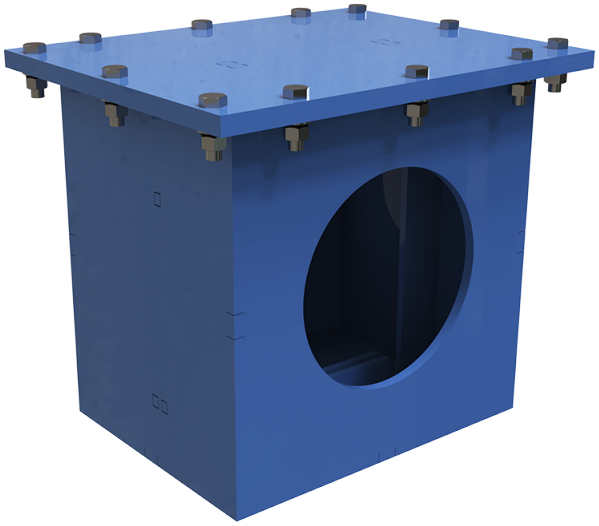

	Unit of measurement	KZR-S-DN225
Connected air duct size	mm	225
Weight	kg	48

Dimensions

ØD
225

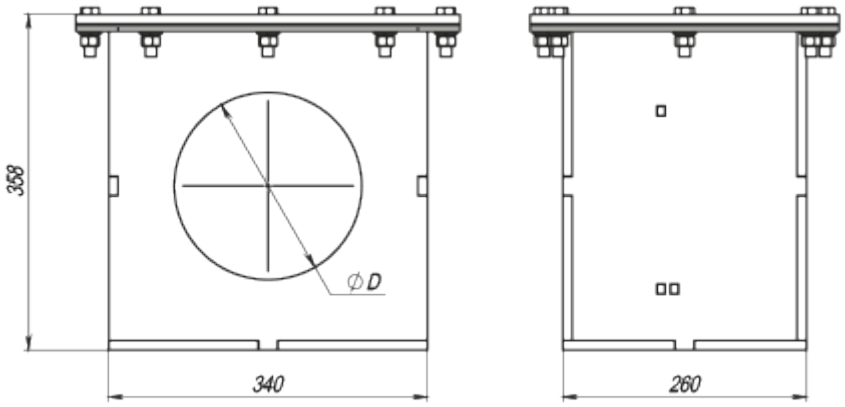

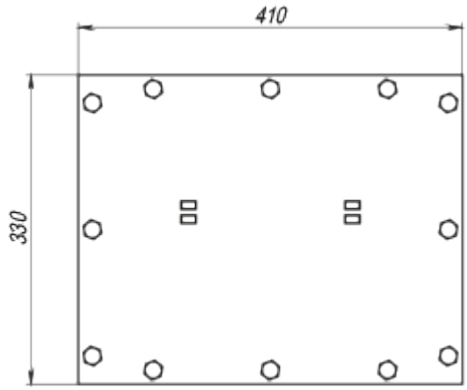
410
330

