KZR-S-DN250

Protective grille casing

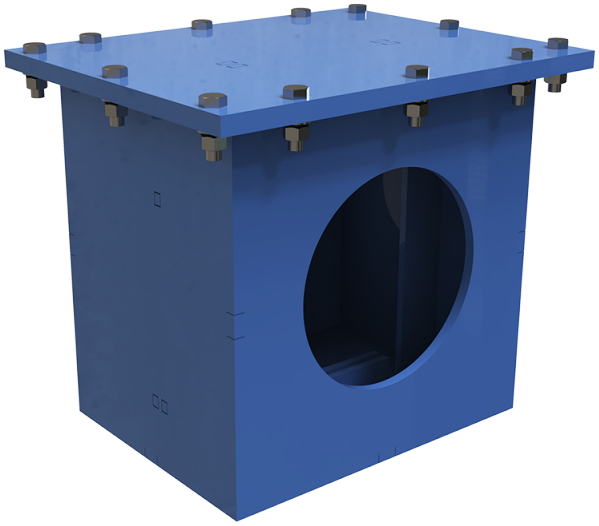

	Unit of measurement	KZR-S-DN250
Connected air duct size	mm	250
Weight	kg	47

Dimensions

ØD
250

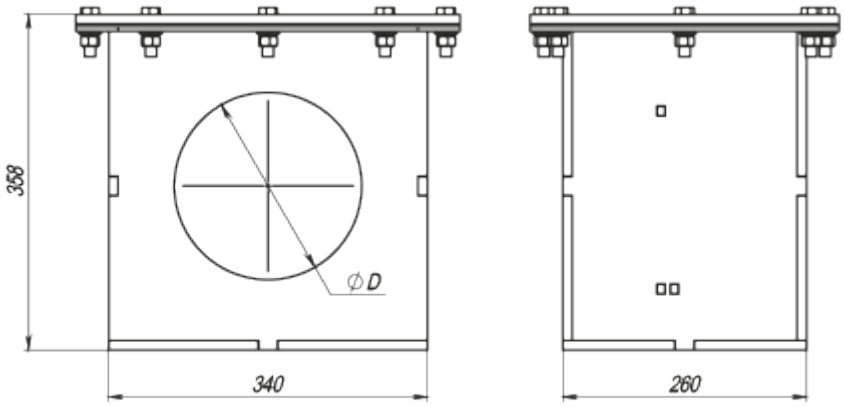

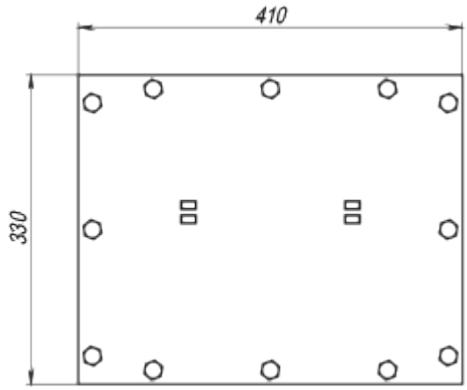
410
330

