KZR-S-DN300

Protective grille casing

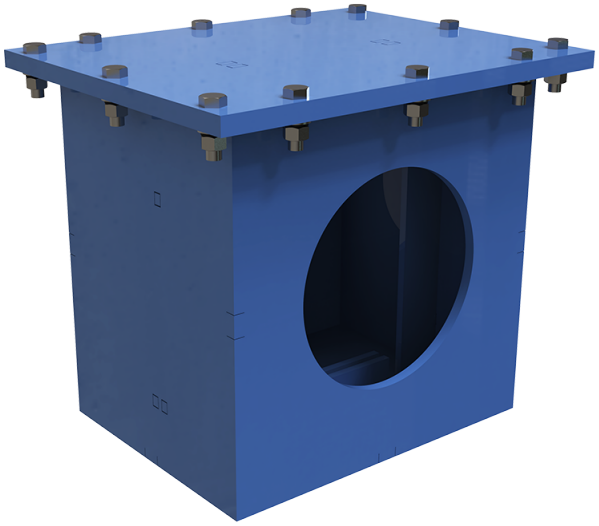

	Unit of measurement	KZR-S-DN300
Connected air duct size	mm	300
Weight	kg	43

Dimensions

ØD
300

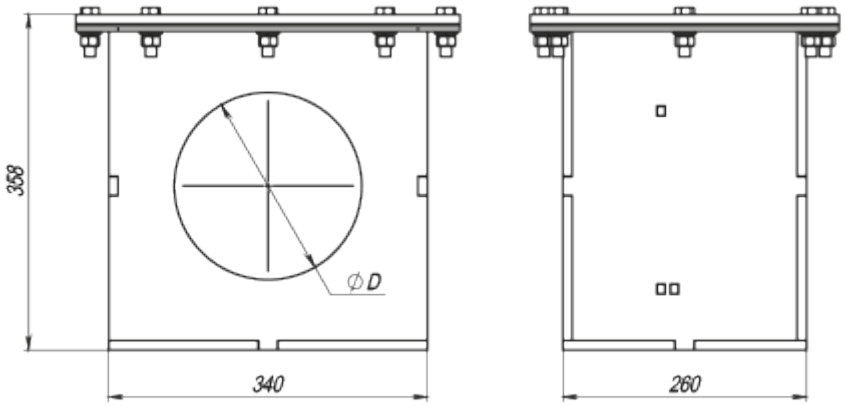

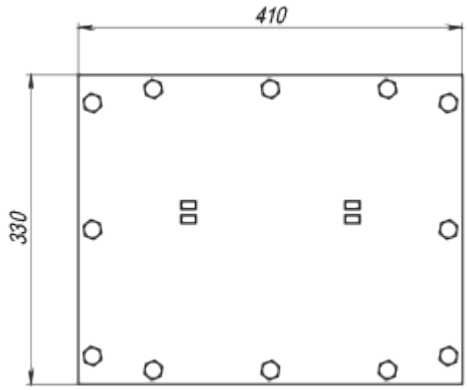
410
330

