MV 100 VUs ASA

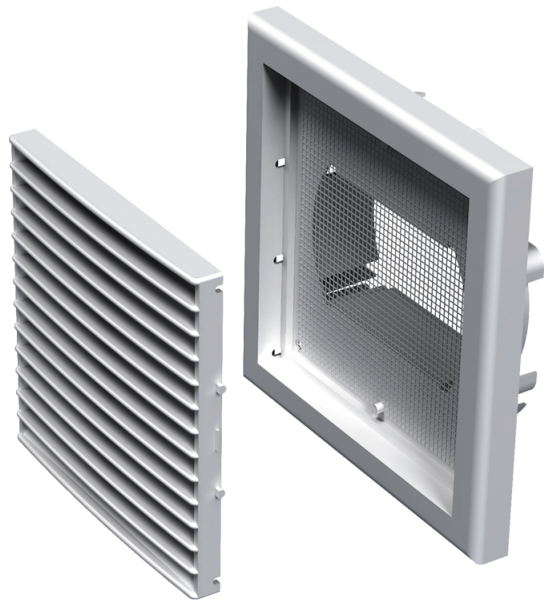

Supply and exhaust plastic grilles

- Casing material: ASA Plastic
- Options for grilles: Insect screen

	Unit of measurement	MV 100 VUs ASA
Connected air duct size	mm	100

Dimensions

D	B	H	L	L1
100, 125, 55x110	154	110	15	39

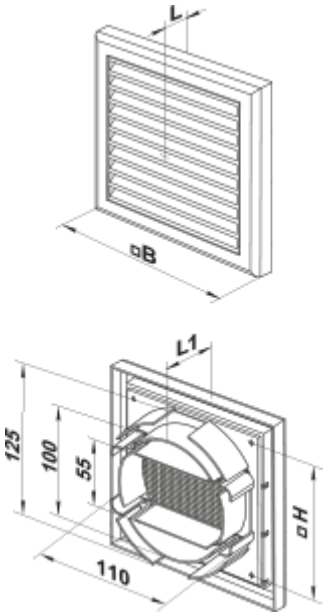
L
B
L1
125
100
55
H
110