MV 102 VK terracotta

Supply and exhaust hoods

• Casing material: Plastic

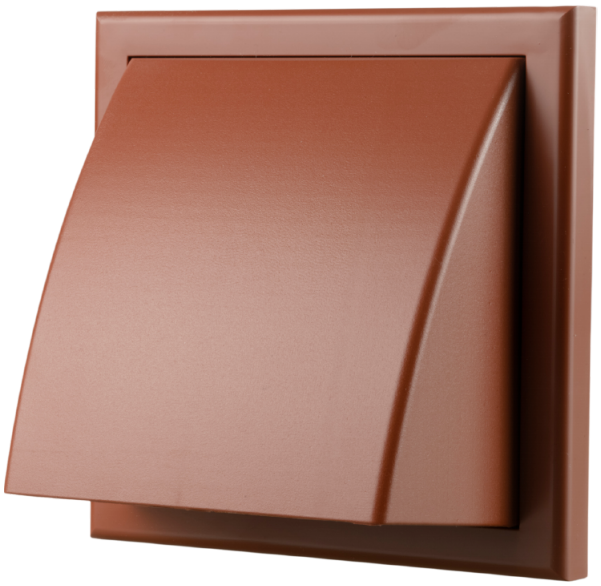

	Unit of measurement	MV 102 VK terracotta
Connected air duct size	mm	100

Dimensions

B	H	L	L1	L2	D
154	110	15	45	87	100

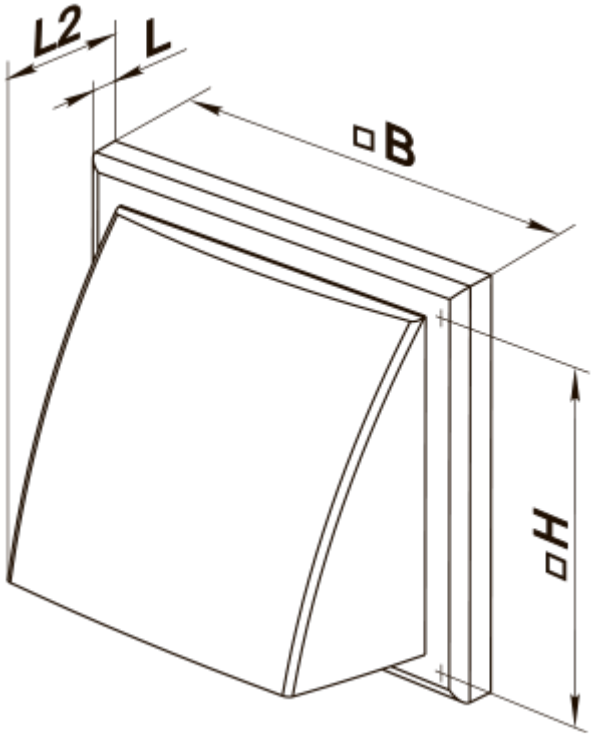
L2
L
B
H

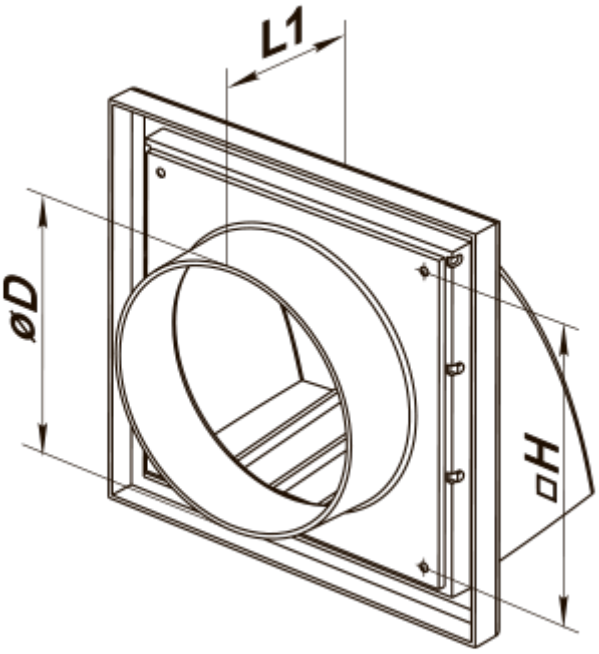
L1
øD
H