MV 102 VU ASA



Supply and exhaust hoods

- Casing material: ASA Plastic

	Unit of measurement	MV 102 VU ASA

Dimensions

B	H	L	L1	L2	D
154	110	15	39	87	100, 125, 55 x 110

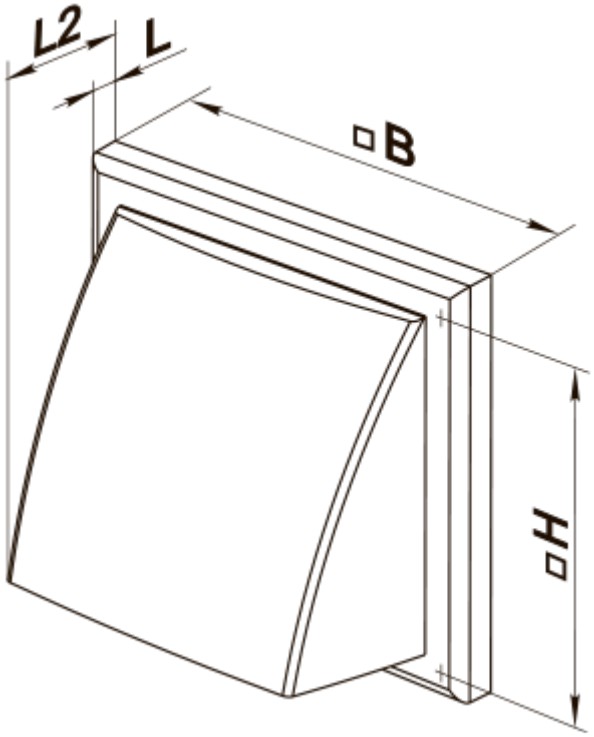
L2
L
B
H

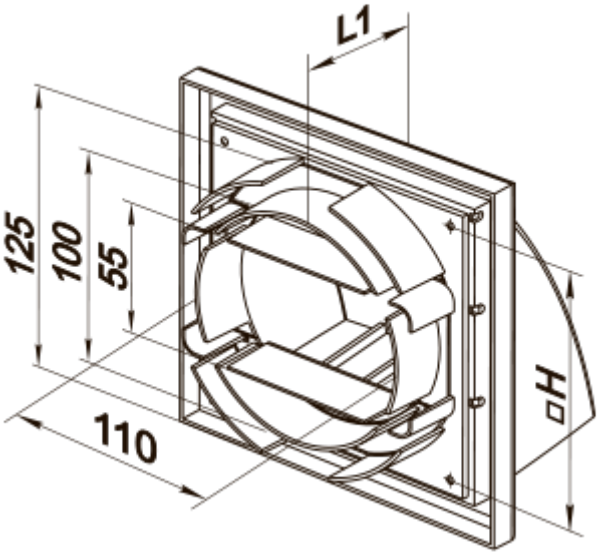
L1
125
100
55
110
H