MV 102 VUK

Supply and exhaust hoods

• Casing material: Plastic



	Unit of measurement	MV 102 VUK
Connected air duct size	mm	100

Dimensions

B	H	L	L1	L2	D
154	110	15	39	87	100, 125, 55 x 110

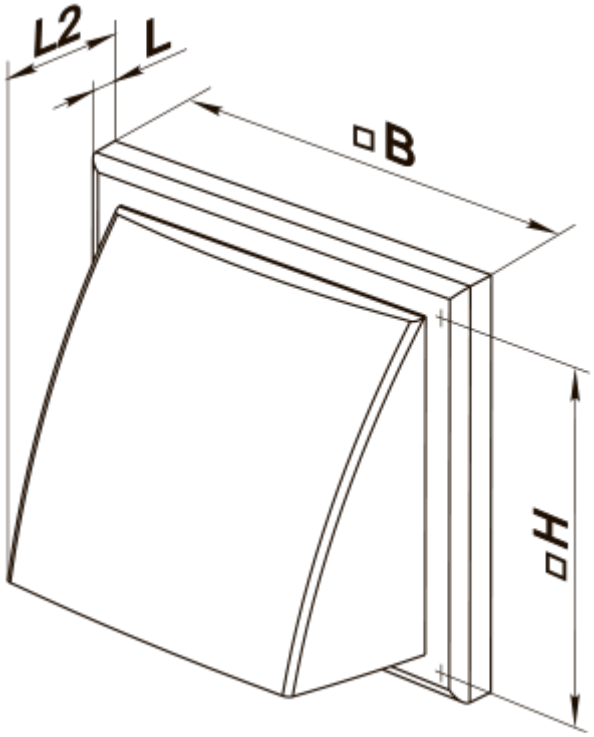
L2
L
B
H

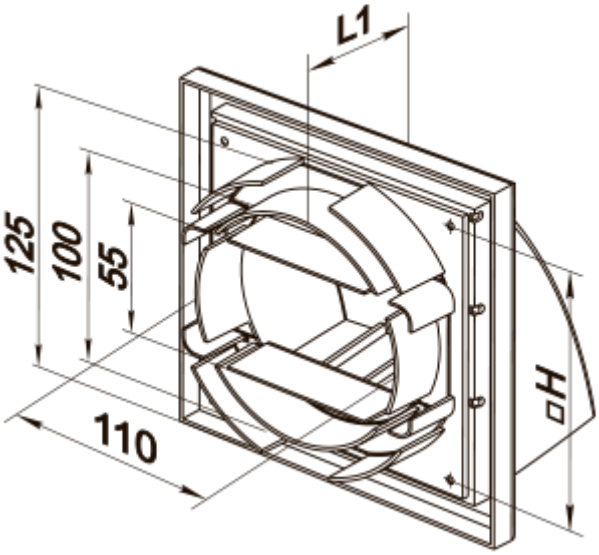
L1
125
100
55
110
H