# MV 103 Rs



Two-piece plastic grilles with angled louvers, optional flange

- Casing material: Plastic
- Options for grilles: Air flow regulator

| | Unit of measurement | MV 103 Rs |
|---|---|---|

## Dimensions

| B | H | B1 | H1 | L |
|---|---|---|---|---|
| 156 | 151 | 110 | 95 | 18 |

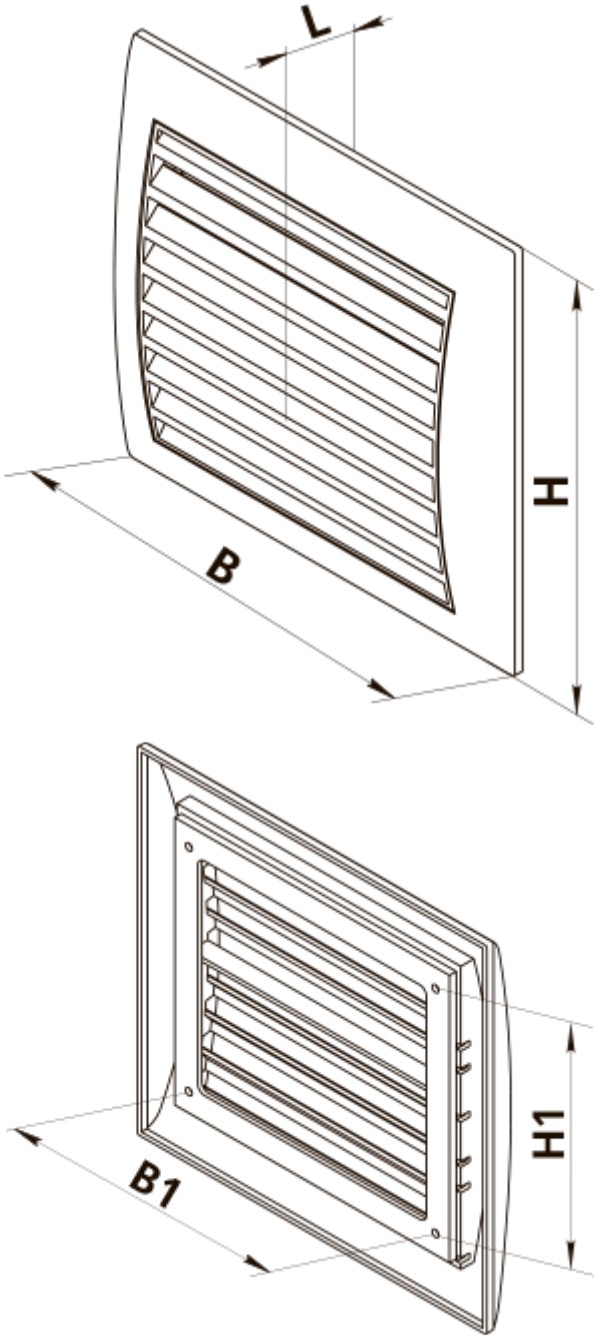
L
H
B
H1
B1