MV 103 Vs

Two-piece plastic grilles with angled louvers, optional flange

- Casing material: Plastic
- Options for grilles: Insect screen

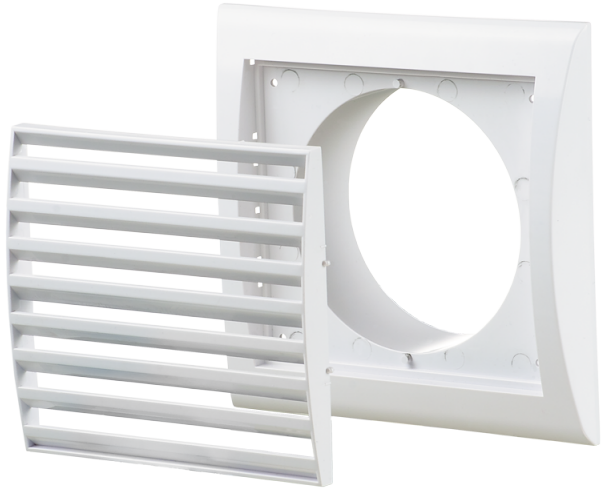

	Unit of measurement	MV 103 Vs
Connected air duct size	mm	100

Dimensions

B	H	B1	H1	L	L1	D
156	151	110	95	18	35	100

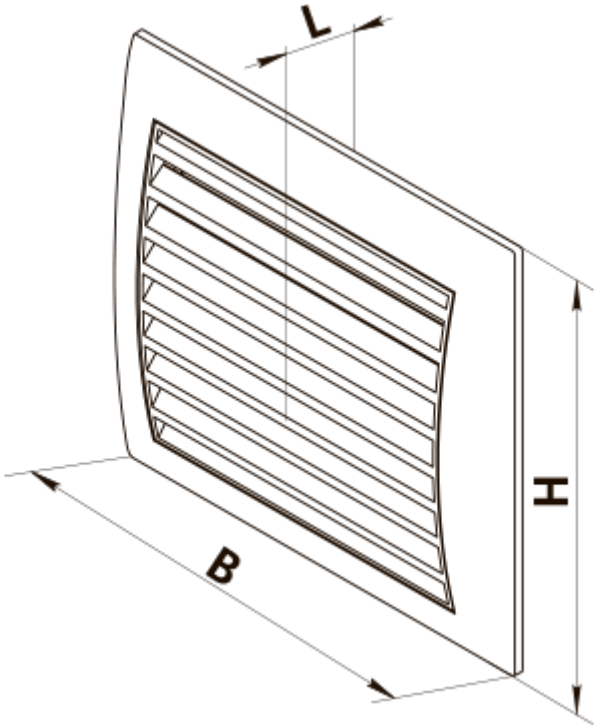
L
H
B

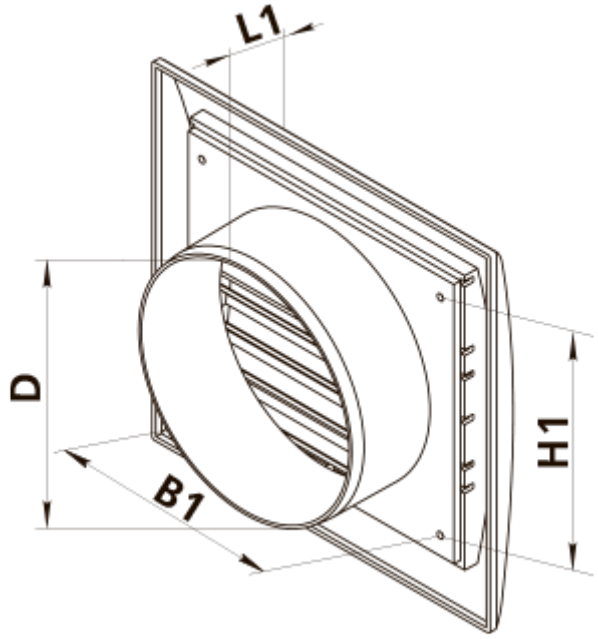
L1
D
H1
B1