MV 122 K brown



Supply and exhaust hoods

- Casing material: Plastic

	Unit of measurement	MV 122 K brown
Connected air duct size	mm	120

Dimensions

B	H	L	L2
186	142	15	101

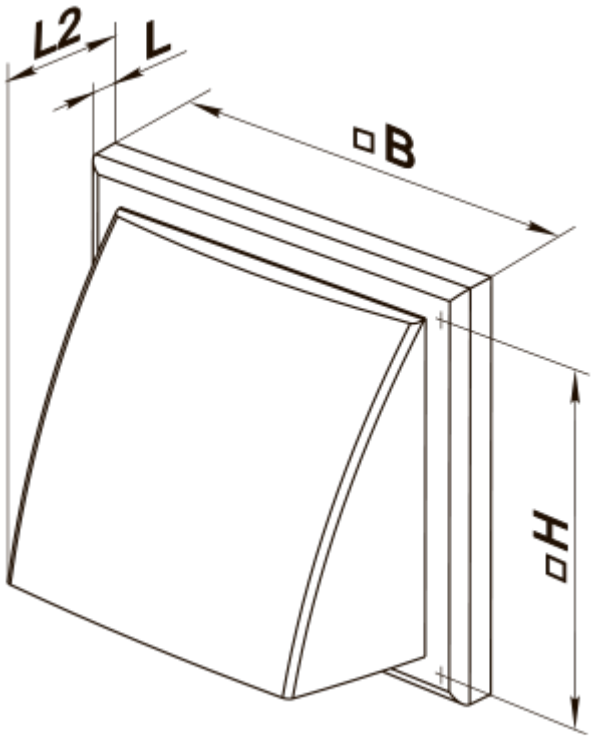
L2
L
B
H