MV 122 VK ABS brown

Supply and exhaust hoods

- Casing material: Plastic



	Unit of measurement	MV 122 VK ABS brown
Connected air duct size	mm	120

Dimensions

B	H	L	L1	L2	D
186	142	15	45	101	125

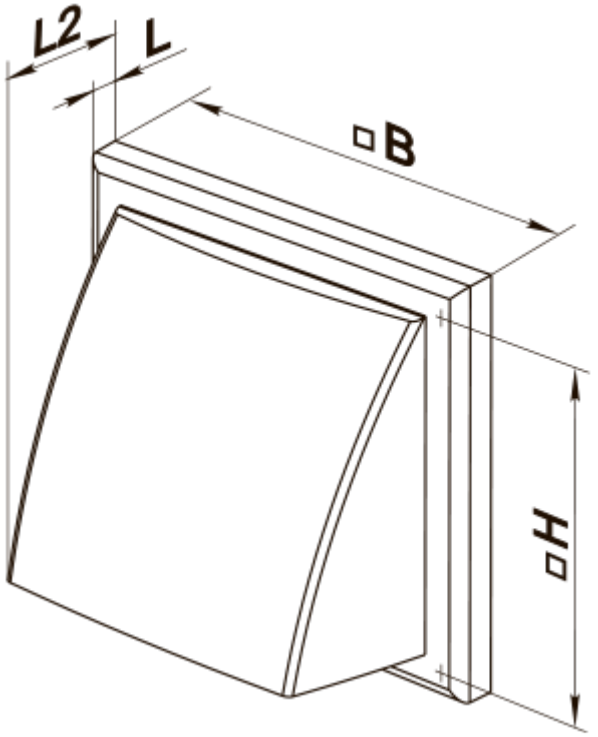
L2
L
B
H

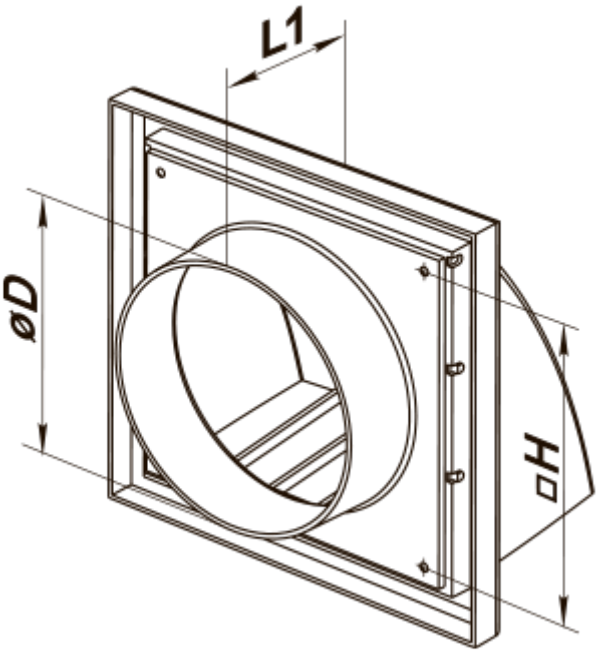
L1
øD
H