MV 123/125 VRs



Two-piece plastic grilles with angled louvers, optional flange

- Casing material: Plastic
- Options for grilles: Air flow regulator

	Unit of measurement	MV 123/125 VRs
Connected air duct size	mm	125

Dimensions

B	H	B1	H1	L	L1	D
193	188	151	135	18	35	125

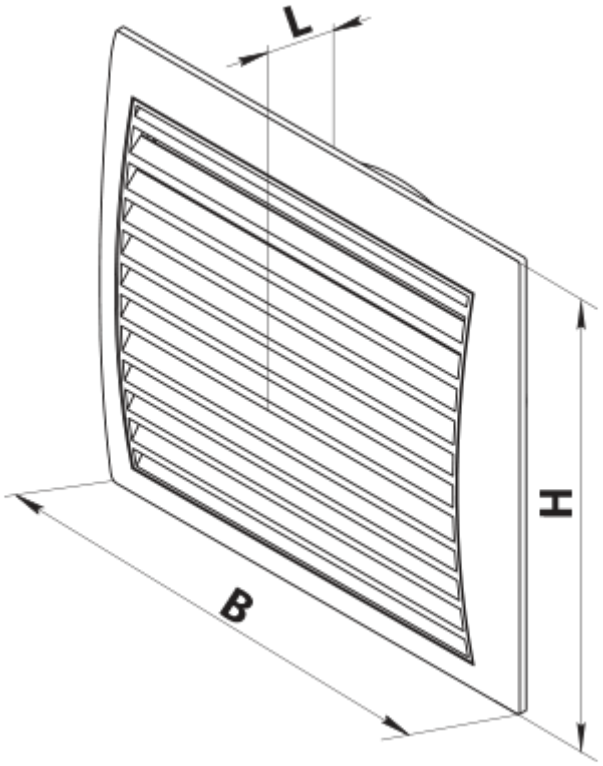
L
H
B

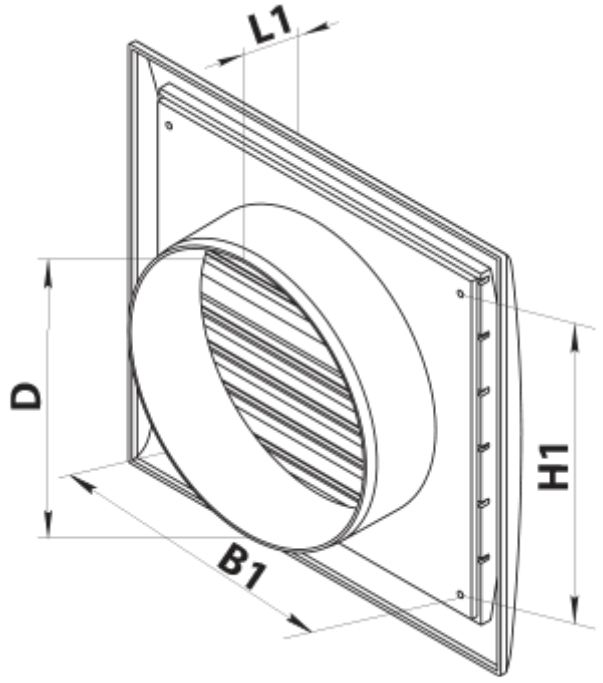
L1
D
H1
B1