MV 123 J



Two-piece plastic grilles with angled louvers, optional flange

- Casing material: Plastic
- Options for grilles: Louvre shutters

	Unit of measurement	MV 123 J

Dimensions

B	H	B1	H1	L
193	188	151	135	18

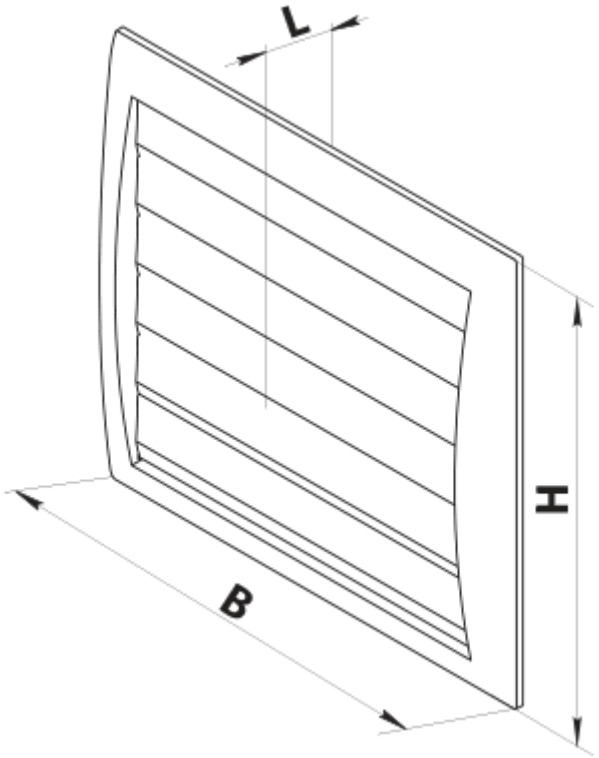
L
H
B

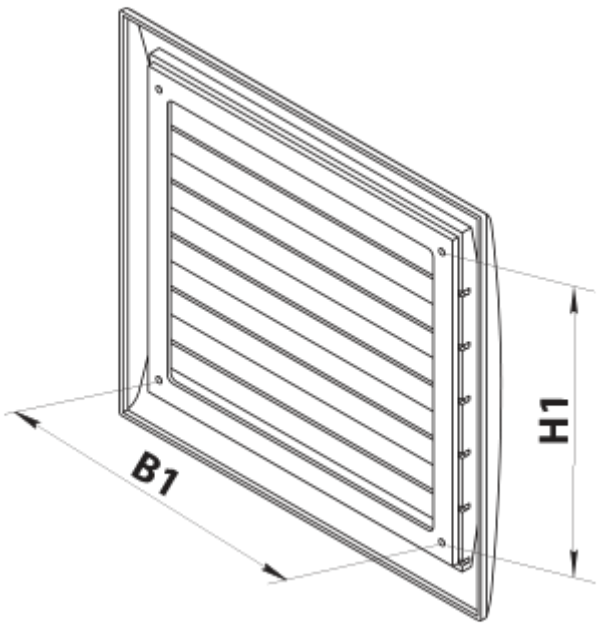
H1
B1