MV 152 VK brown



Supply and exhaust hoods

• Casing material: Plastic

	Unit of measurement	MV 152 VK brown
Connected air duct size	mm	150

Dimensions

B	H	L	L1	L2	D
186	142	15	50	101	150

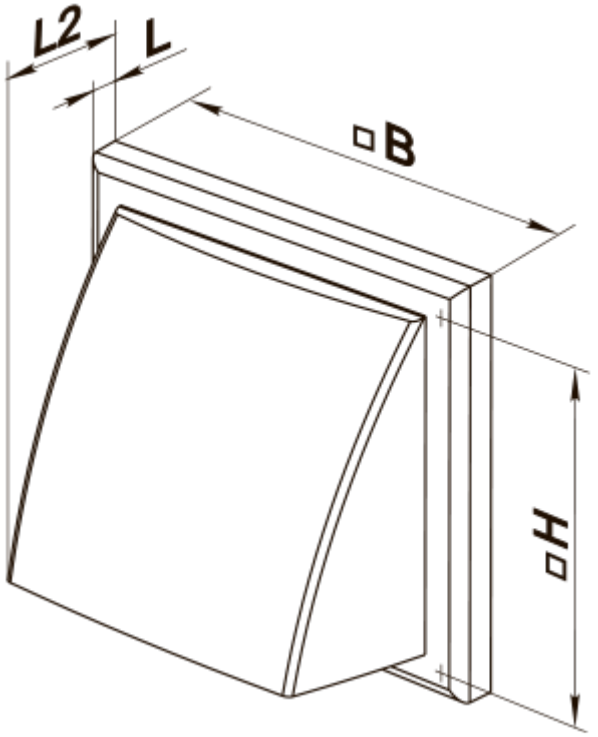
L2
L
B
H

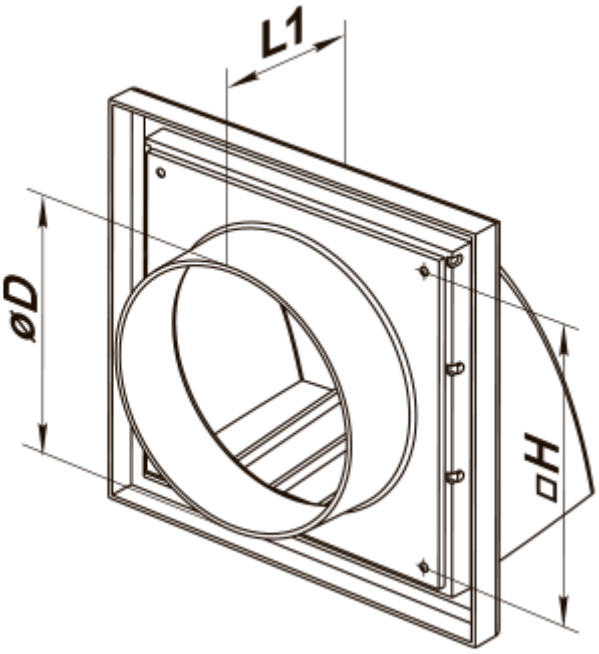
L1
øD
H