MV 430/2 light oak

Set of plastic grilles with angled louvers, one-piece, for door installation

- Casing material: Plastic



	Unit of measurement	MV 430/2 light oak

Dimensions

H	L
91	453

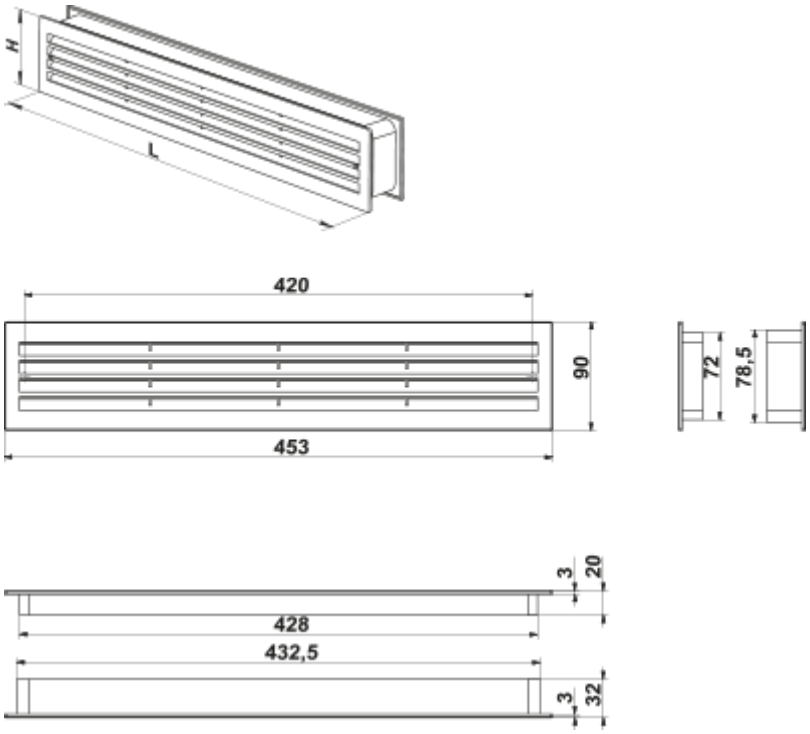
H
L
420
90
453
72
78,5
3
20
428
432,5
3
32