MV 440/2

Set of plastic grilles with angled louvers, one-piece, for door installation

- Casing material: Plastic



	Unit of measurement	MV 440/2

Dimensions

H	L
120	460

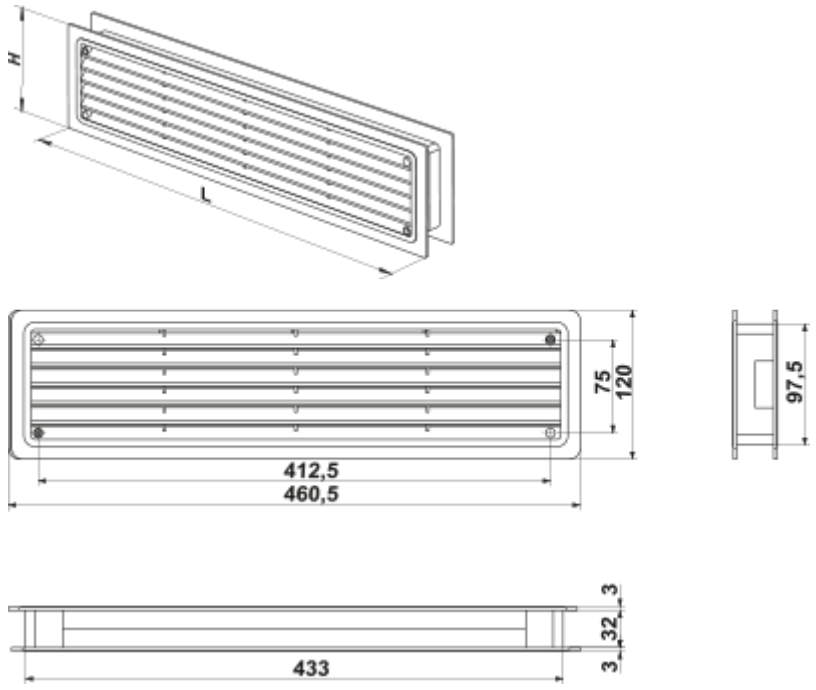
H
L
75
120
97,5
412,5
460,5
3
32
3
433