MVM 202 bVs N

Supply and exhaust metal hoods

• Casing material: Stainless steel



	Unit of measurement	MVM 202 bVs N
Connected air duct size	mm	200
Free air	m²	0.0178

Dimensions

ØD	ØD1	L
195	253	73

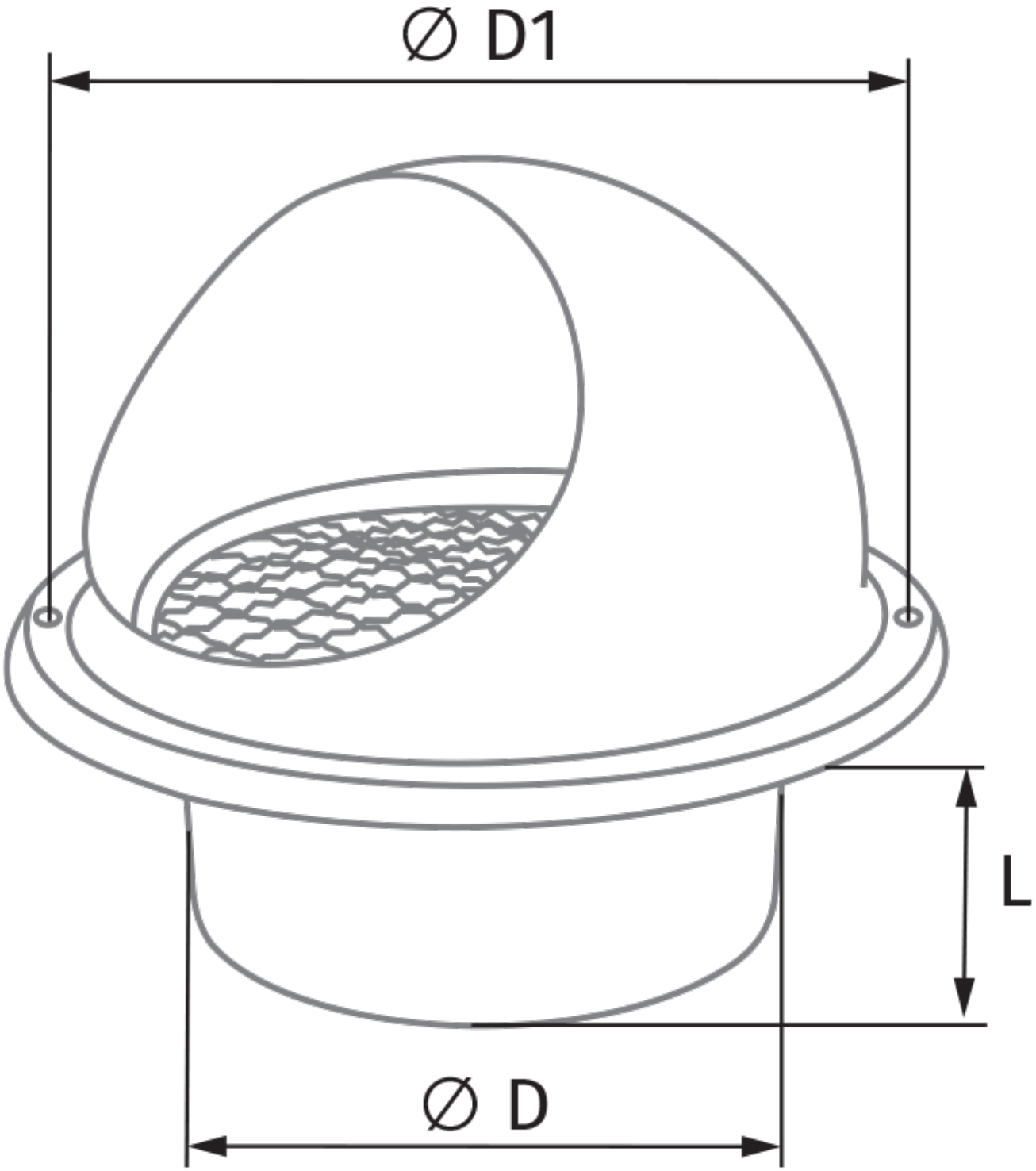
Ø D1
L
Ø D