MVM 250x80/5-3 brown

Single-row metal grilles with straight louvers, for door installation

- Casing material: Steel



	Unit of measurement	MVM 250x80/5-3 brown

Dimensions

L	H	l	h	A
250	80	236	66	11.5

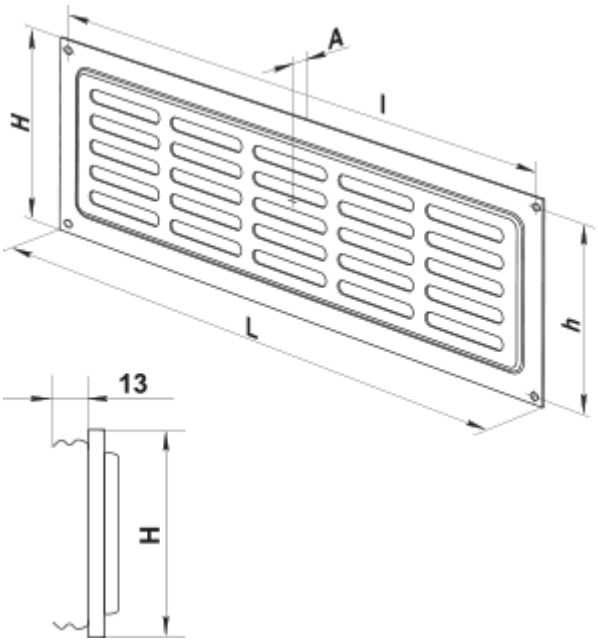
A
l
H
h
L
13
H