# MVMP 250x170/2



Multiple-row metal grilles with angled louvers, multiple-row

• Casing material: Coated steel

| | Unit of measurement | MVMP 250x170/2 |
|---|---|---|

## Dimensions

| L | H | l | h | A |
|---|---|---|---|---|
| 250 | 170 | 236 | 156 | 0.8 |

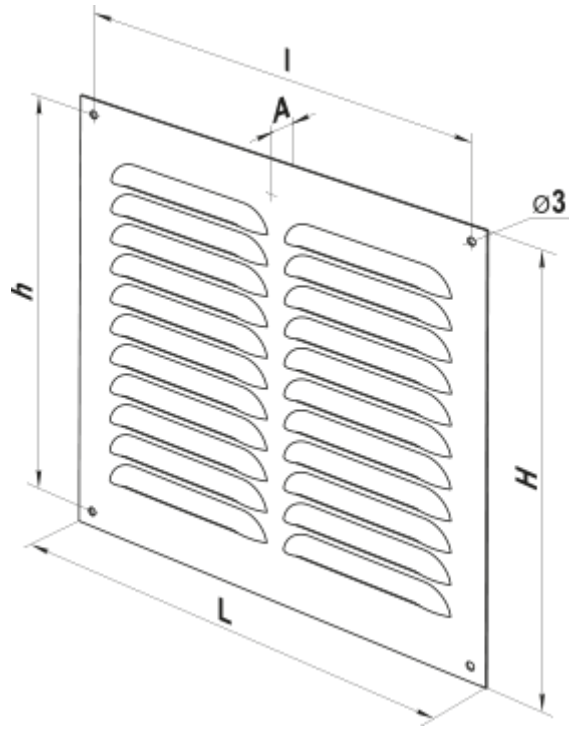
l
A
⌀3
h
H
L