MVMP 350x450/3



Multiple-row metal grilles with angled louvers, multiple-row

• Casing material: Coated steel

	Unit of measurement	MVMP 350x450/3

Dimensions

L	H	l	h	A
350	450	336	436	0.8

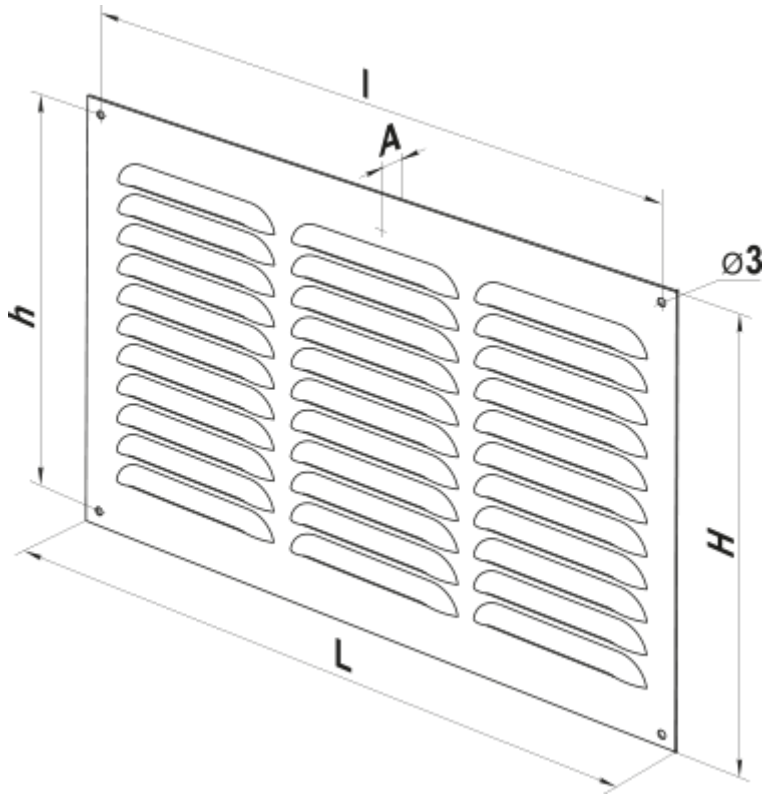
l
A
h
⌀3
H
L