MVMPO 155 R



Single-row flanged metal grilles with straight louvers, adjustable

- Casing material: Steel
- Options for grilles: Air flow regulator

	Unit of measurement	MVMPO 155 R

Dimensions

L	H	l	h	A
155	155	132	132	9

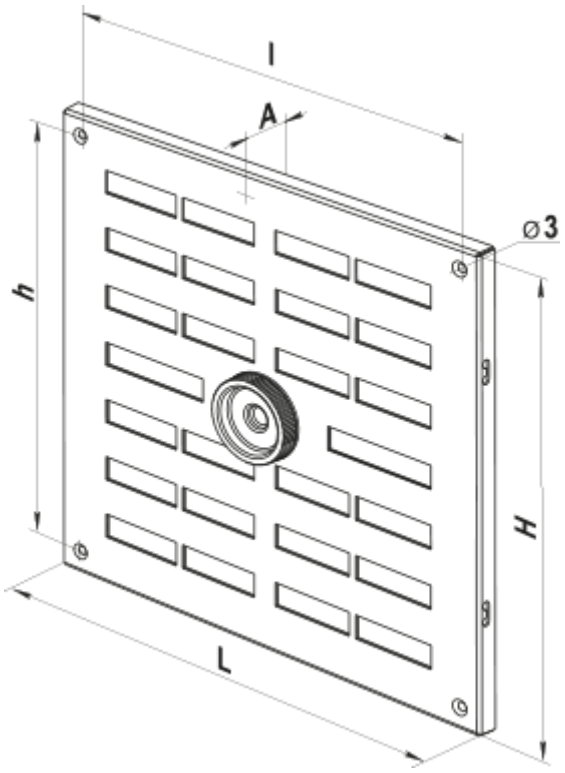
l
A
⌀3
h
H
L