MVMPO 200 R



Single-row flanged metal grilles with straight louvers, adjustable

- Casing material: Steel
- Options for grilles: Air flow regulator

	Unit of measurement	MVMPO 200 R

Dimensions

L	H	l	h	A
200	200	182	182	9

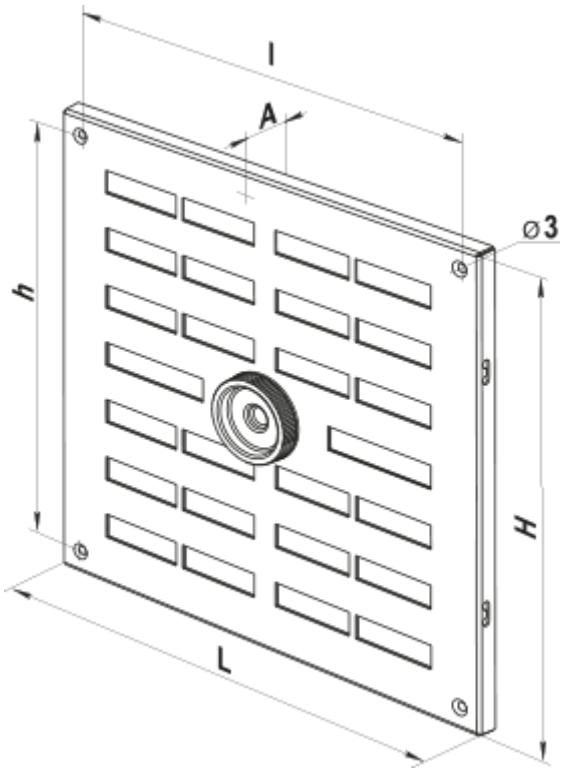
l
A
⌀3
h
H
L