MVMPO 225x150/2

Supply and exhaust multiple-row edge-raised metal grilles

• Casing material: Coated steel

	Unit of measurement	MVMPO 225x150/2

Dimensions

L	H	l	h	A
225	150	211	136	5.5

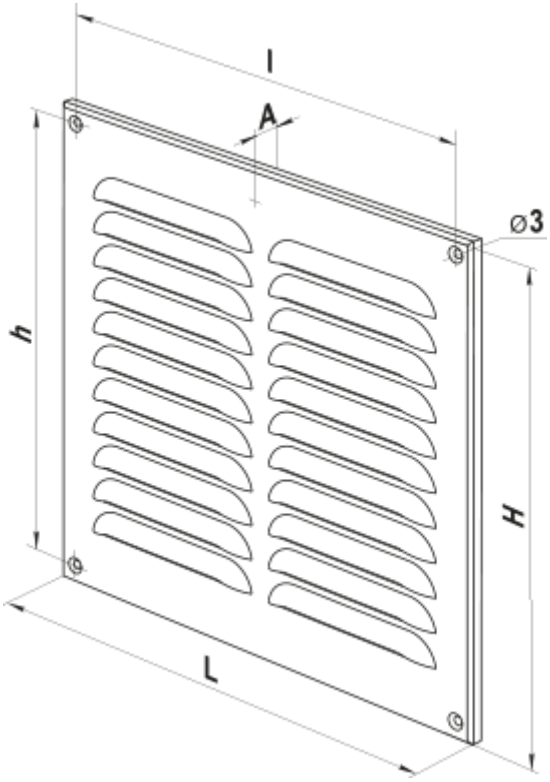
l
A
⌀3
h
H
L