MVMPO 250x140/2



Multiple-row flanged metal grilles with angled louvers

- Casing material: Coated steel

	Unit of measurement	MVMPO 250x140/2

Dimensions

L	H	l	h	A
250	140	236	126	5.5

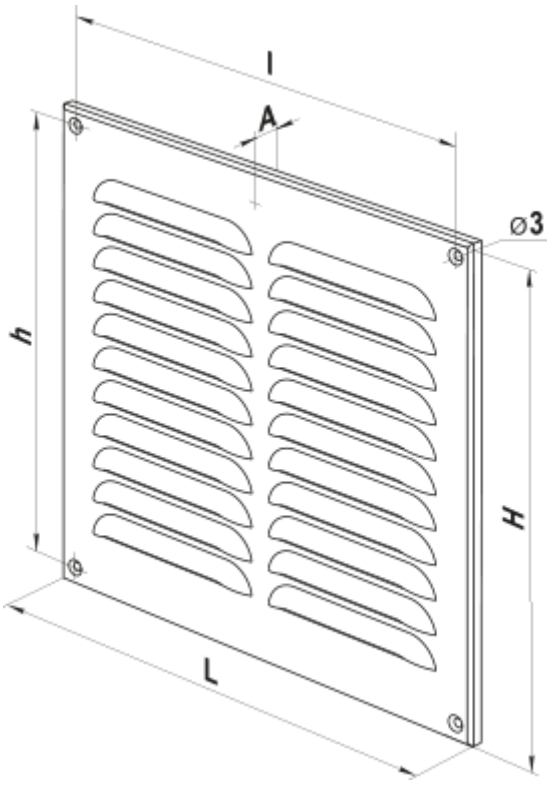
l
A
ø3
h
H
L