# MVMPO 250x450/2



Multiple-row flanged metal grilles with angled louvers

- Casing material: Coated steel

| | Unit of measurement | MVMPO 250x450/2 |
|---|---|---|

## Dimensions

| L | H | l | h | A |
|---|---|---|---|---|
| 250 | 450 | 236 | 436 | 5.5 |

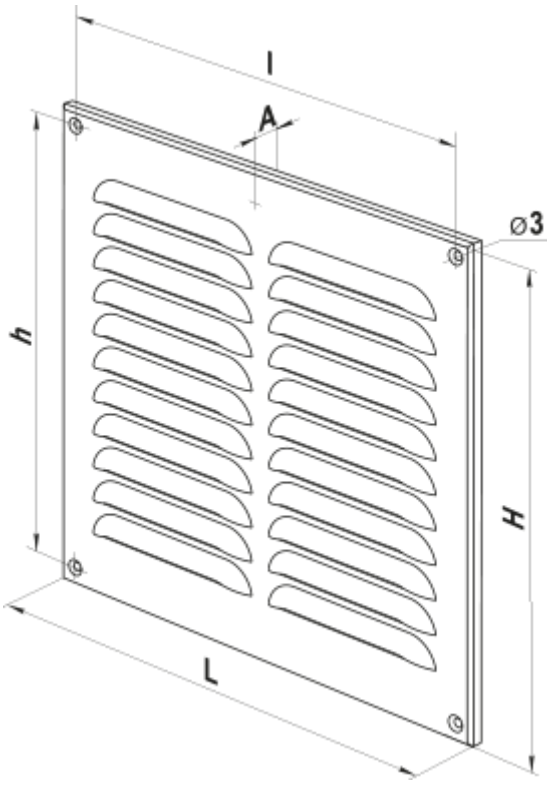
l
A
ø3
h
H
L