MVMPO 350x300/3



Multiple-row flanged metal grilles with angled louvers

- Casing material: Coated steel

	Unit of measurement	MVMPO 350x300/3

Dimensions

L	H	l	h	A
350	300	336	286	5.5

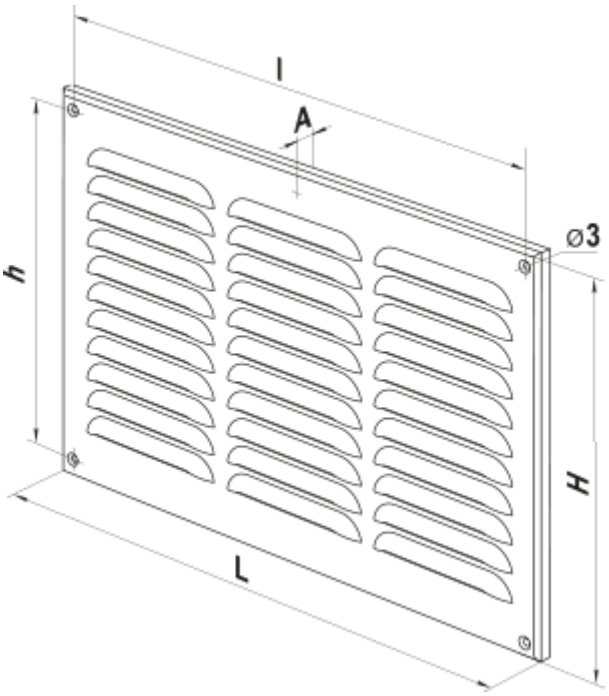
l
A
h
⌀3
H
L