MVMPO 360x140/3



Multiple-row flanged metal grilles with angled louvers

- Casing material: Coated steel

	Unit of measurement	MVMPO 360x140/3

Dimensions

L	H	l	h	A
360	140	346	126	5.5

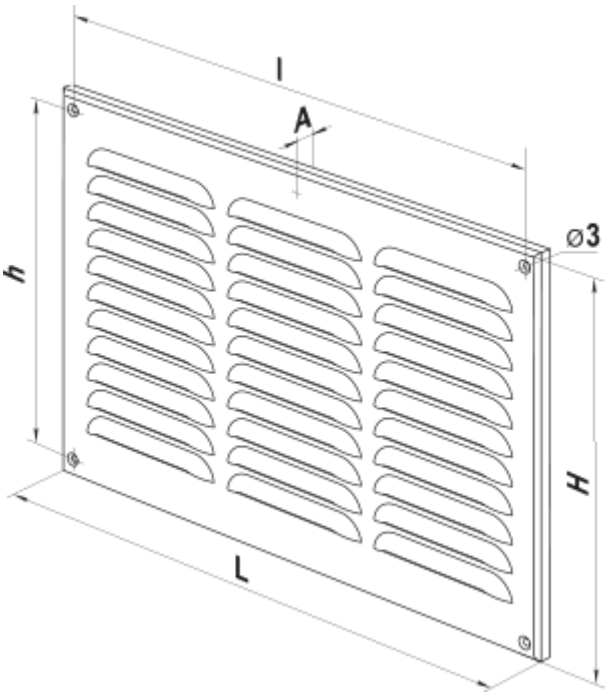
l
A
h
⌀3
H
L