MVMPO 360x180/3



Multiple-row flanged metal grilles with angled louvers

- Casing material: Coated steel

	Unit of measurement	MVMPO 360x180/3

Dimensions

L	H	l	h	A
360	180	346	166	5.5

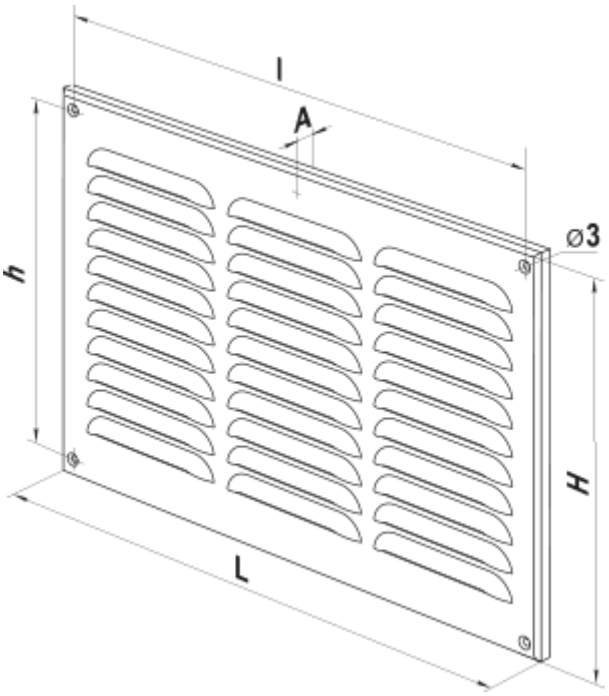
l
A
h
⌀3
H
L