MVMPO 400x200/4



Multiple-row flanged metal grilles with angled louvers

- Casing material: Coated steel

	Unit of measurement	MVMPO 400x200/4

Dimensions

L	H	l	h	A
400	200	386	186	5.5

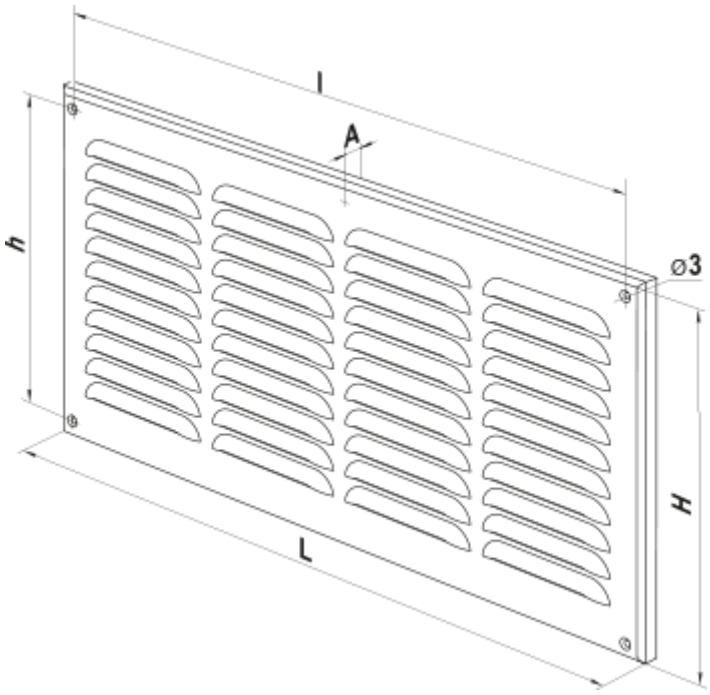
l
A
h
⌀3
H
L