MVMPO 450x300/4



Multiple-row flanged metal grilles with angled louvers

- Casing material: Coated steel

	Unit of measurement	MVMPO 450x300/4

Dimensions

L	H	l	h	A
450	300	436	286	5.5

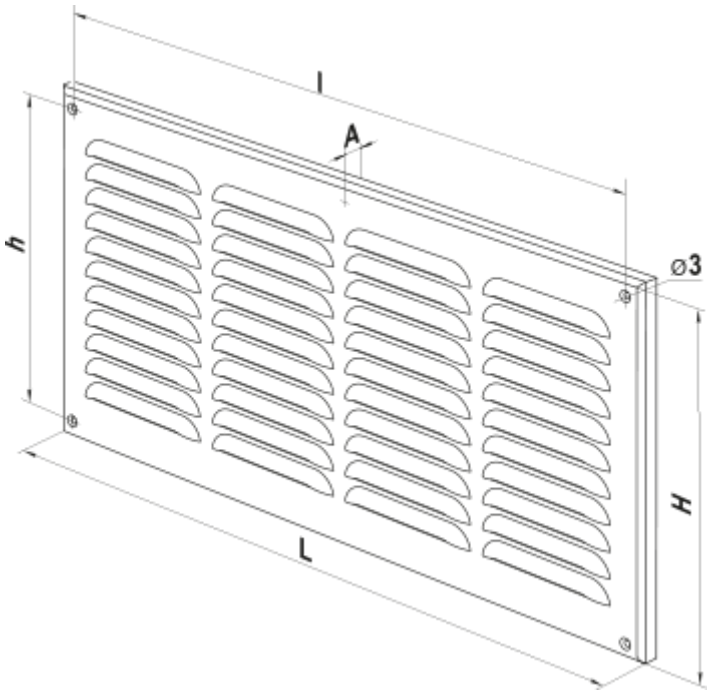
l
A
h
⌀3
H
L