NK 160-3,6-3



Round electric inline heaters with round cross-section

- Casing material: Galvanized steel

	Unit of measurement	NK 160-3,6-3
Connected air duct size	mm	160
Phases	-	3
Minimum supply voltage	V	400
Maximum supply voltage	V	400
Power supply frequency	Hz	50
Rated power	W	3600
Weight	kg	3

Dimensions

ØD	B	H	L	L1	L2
159	120	267	376	296	40

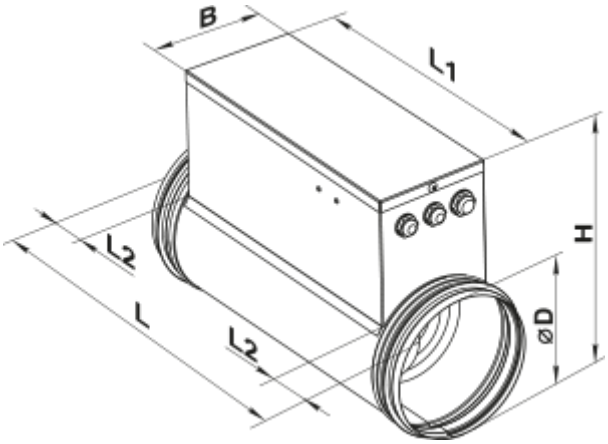

Accessories

Outdoor temperature sensors

Name	Photo	Description
KDT2-M 100		Duct temperature sensors
KDT2-M 150		Duct temperature sensors
KDT2-M 200		Duct temperature sensors
KDT2-M 400		Duct temperature sensors
KDT2-M1 100		Duct temperature sensors
KDT2-M1 150		Duct temperature sensors
KDT2-M1 200		Duct temperature sensors
KDT2-M1 400		Duct temperature sensors
KDT2-MK 100		Duct temperature sensors with a terminal box
KDT2-MK 150		Duct temperature sensors with a terminal box

KDT2-MK 200		Duct temperature sensors with a terminal box
KDT2-MK 400		Duct temperature sensors with a terminal box

Electric triac temperature controllers

Name	Photo	Description
PULSER-M		Electric triac temperature controllers for single and two-phase electric heaters