NK 250-1,2-1 U



Duct electric heater with temperature controller or control unit

- Casing material: Galvanized steel

	Unit of measurement	NK 250-1,2-1 U
Connected air duct size	mm	250
Phases	-	1
Minimum supply voltage	V	230
Maximum supply voltage	V	230
Power supply frequency	Hz	50
Rated power	W	1200
Weight	kg	1

Dimensions

Ø D	B	H	L	L1
249	174	356	376	298

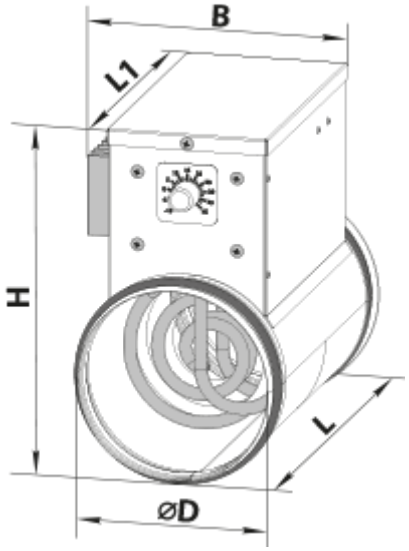

Accessories

Outdoor temperature sensors

Name	Photo	Description
KDT2-M 100		Duct temperature sensors
KDT2-M 150		Duct temperature sensors
KDT2-M 200		Duct temperature sensors
KDT2-M 400		Duct temperature sensors
KDT2-M1 100		Duct temperature sensors
KDT2-M1 150		Duct temperature sensors
KDT2-M1 200		Duct temperature sensors
KDT2-M1 400		Duct temperature sensors
KDT2-MK 100		Duct temperature sensors with a terminal box

KDT2-MK 150		Duct temperature sensors with a terminal box
KDT2-MK 200		Duct temperature sensors with a terminal box
KDT2-MK 400		Duct temperature sensors with a terminal box